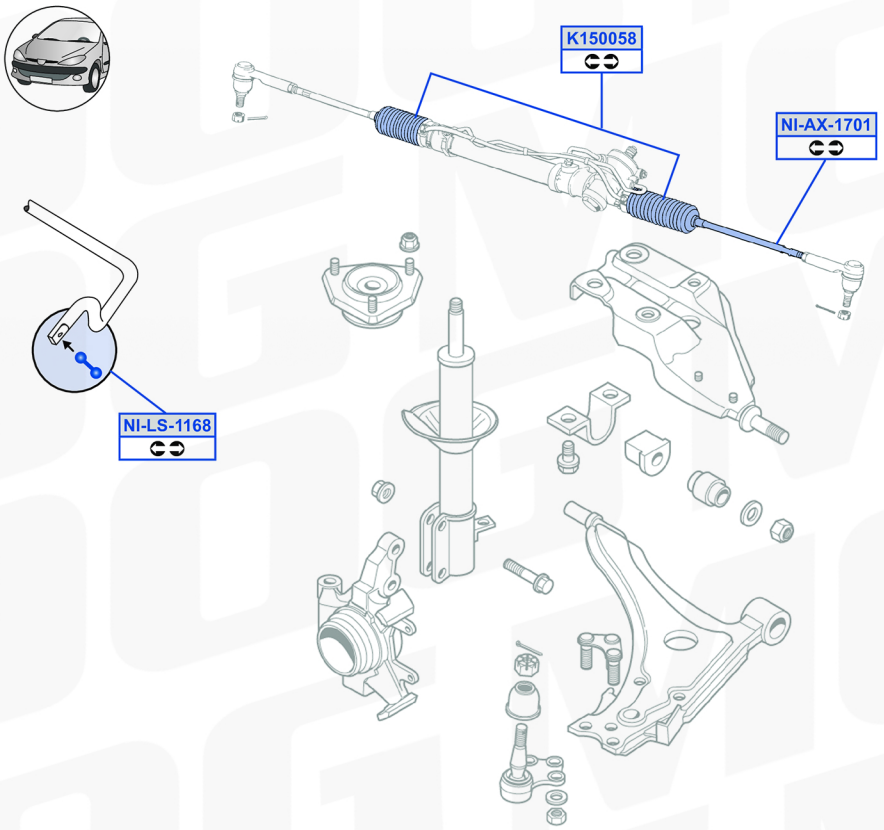

NISSAN-MAXIMA

09/06/2023