MOOG

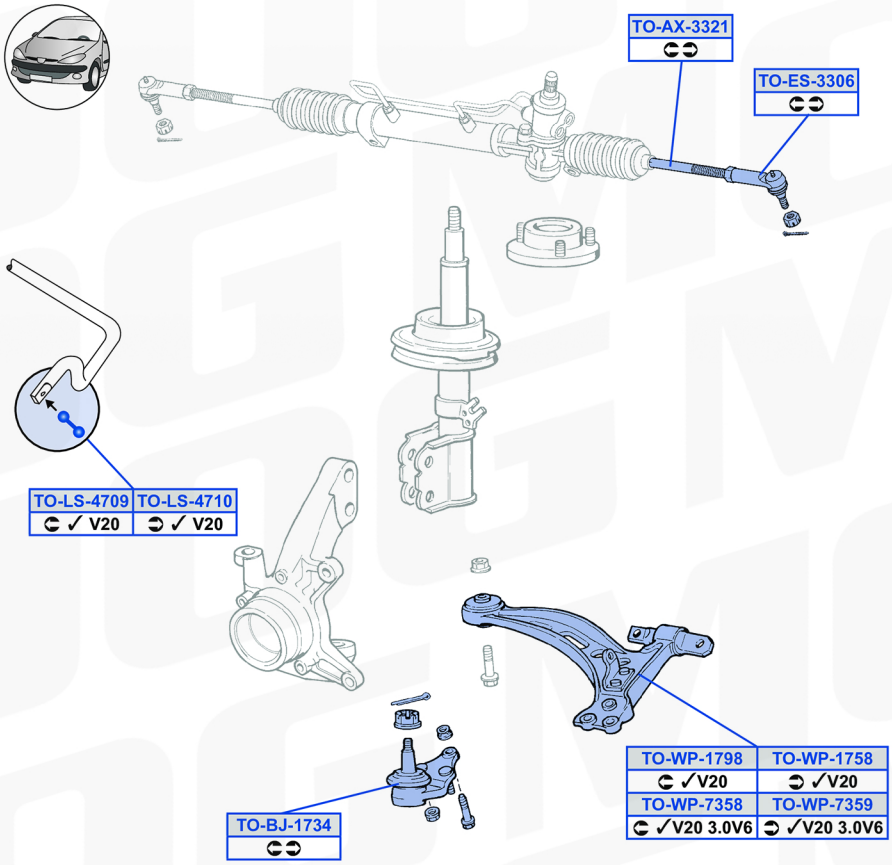

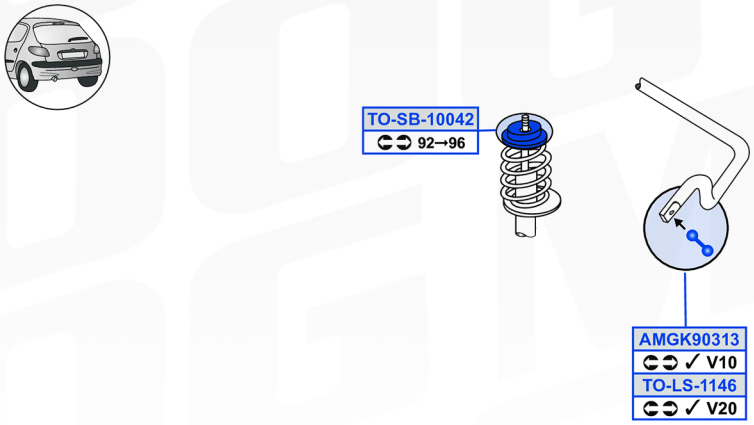

TOYOTA-CAMRY-V10-V20

09/06/2023

www.moogparts.com