MOOG

AUDI
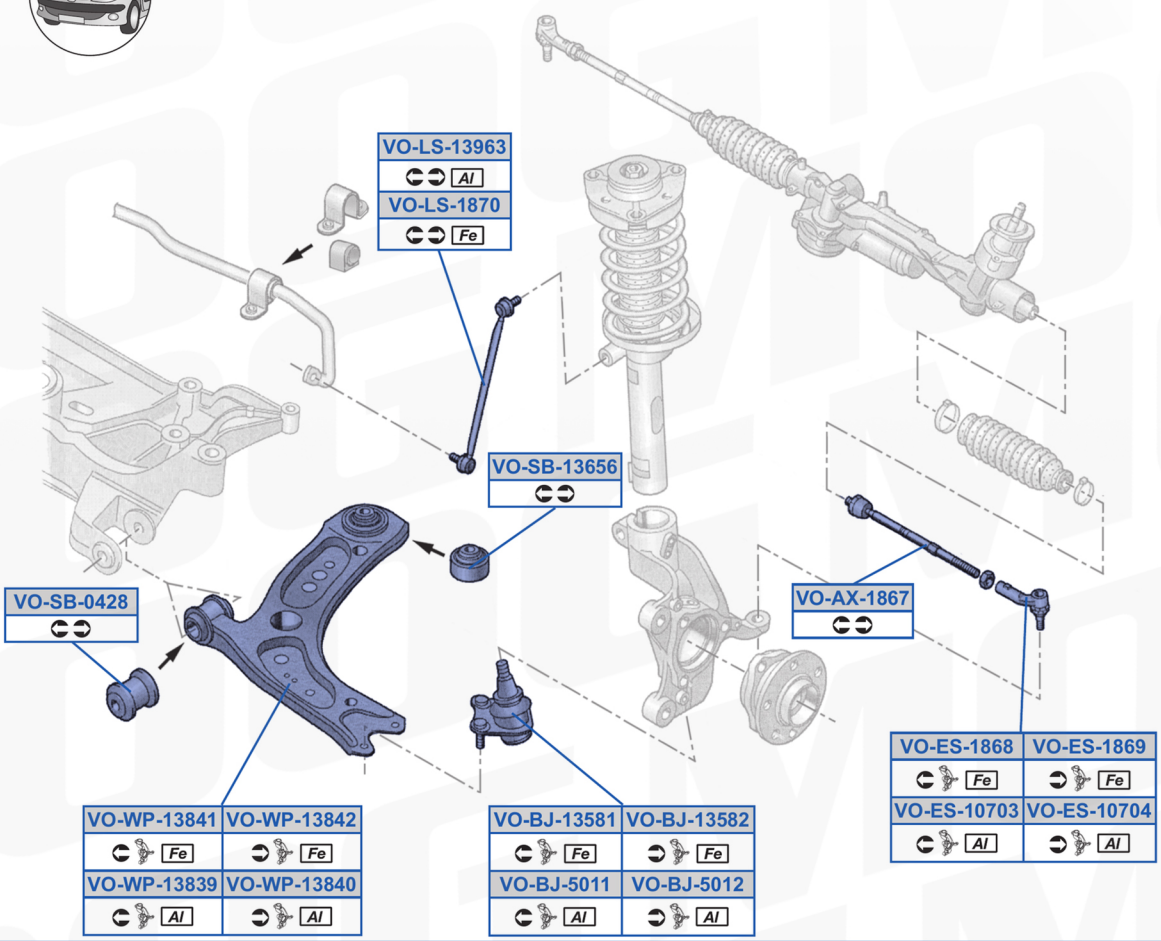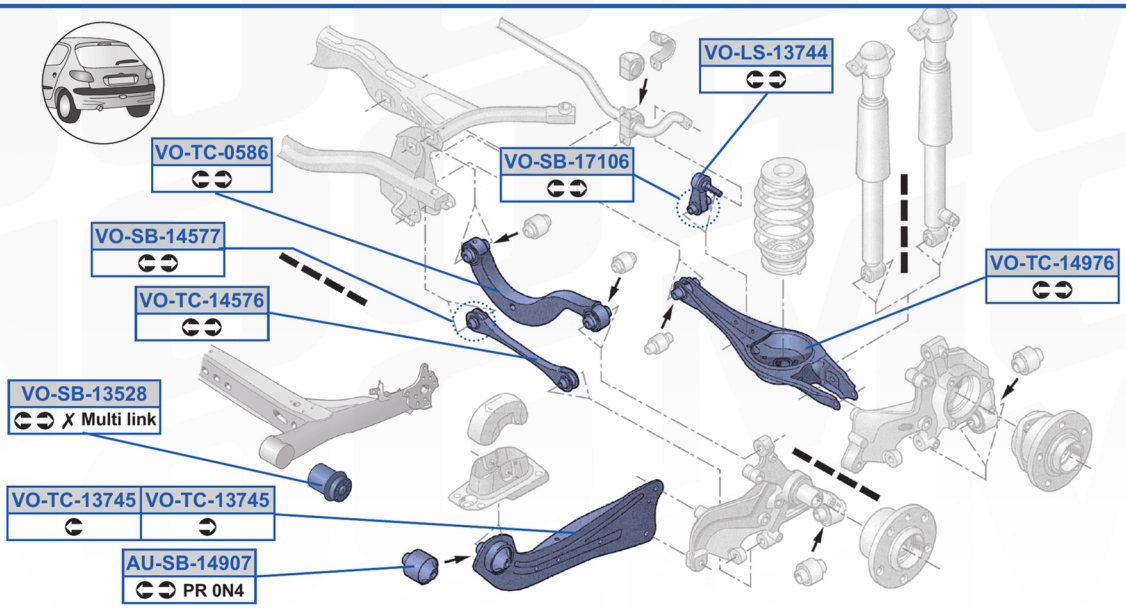
A3 [8V_], Sportback, Limousine, Convertible 04/2012→