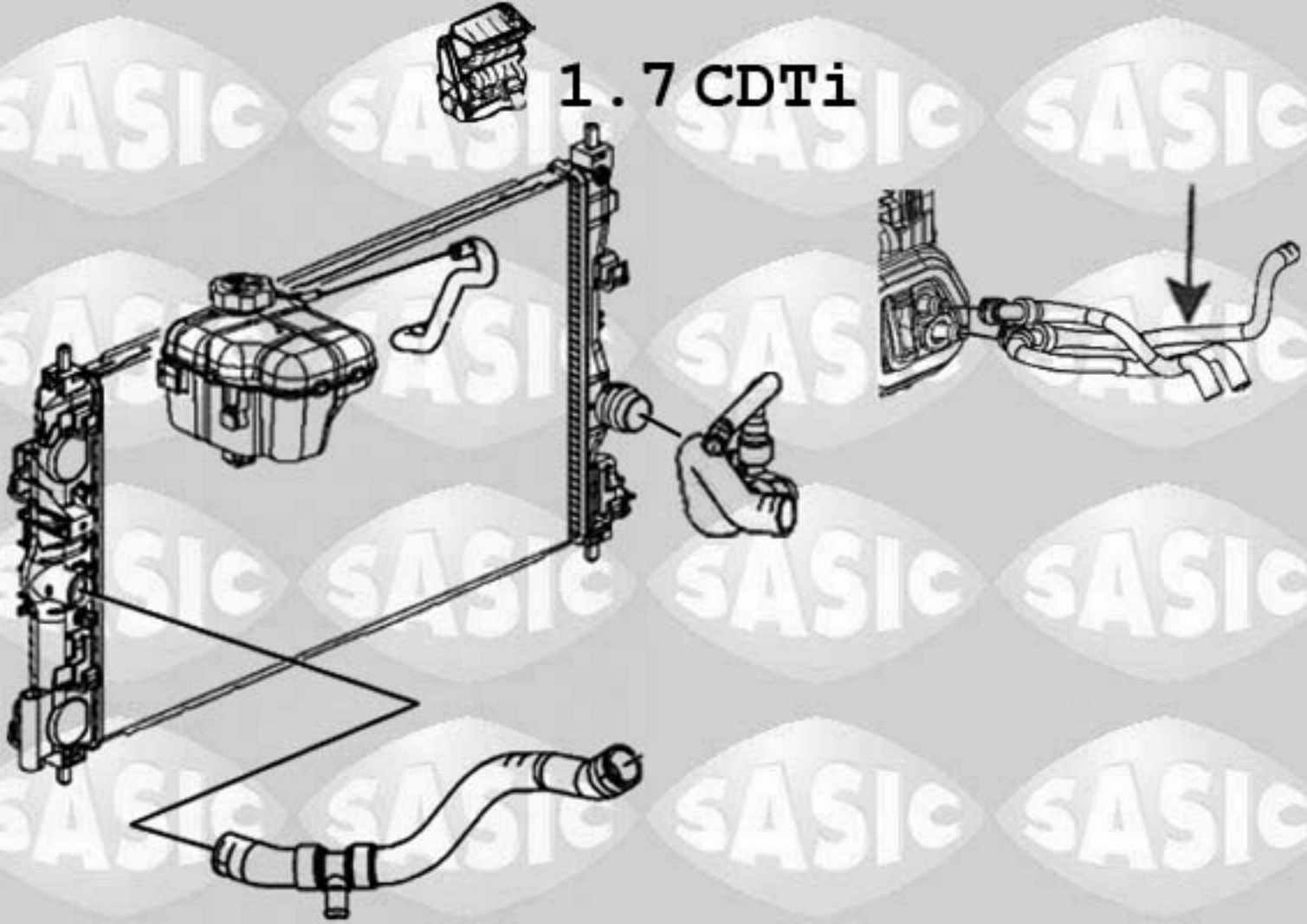1.7 CDTi