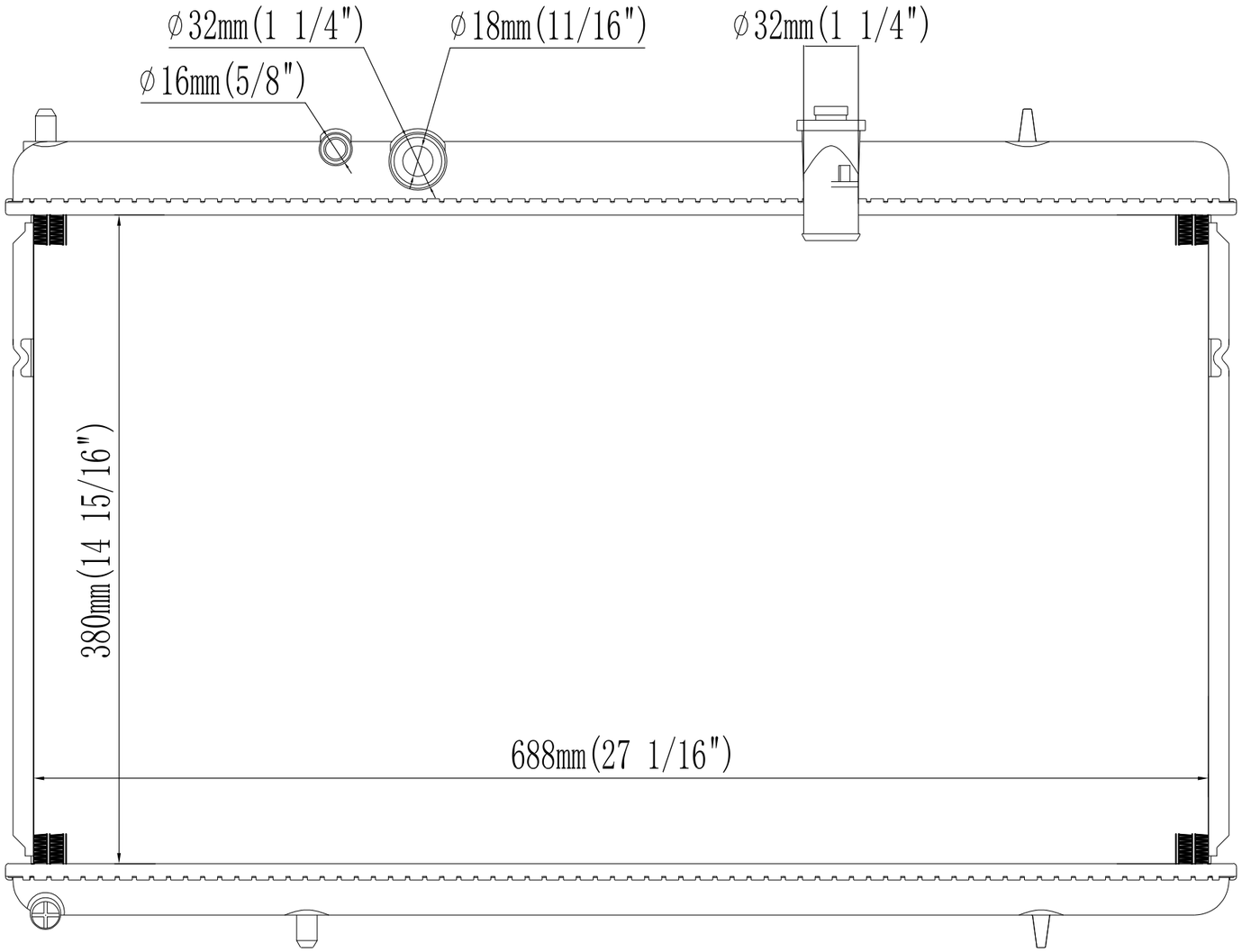


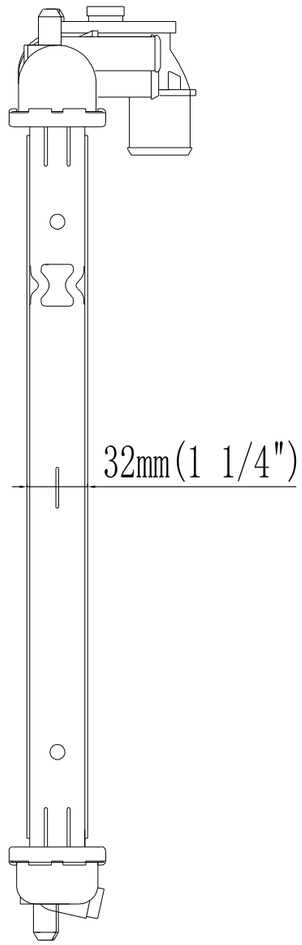


1.40.22012.132