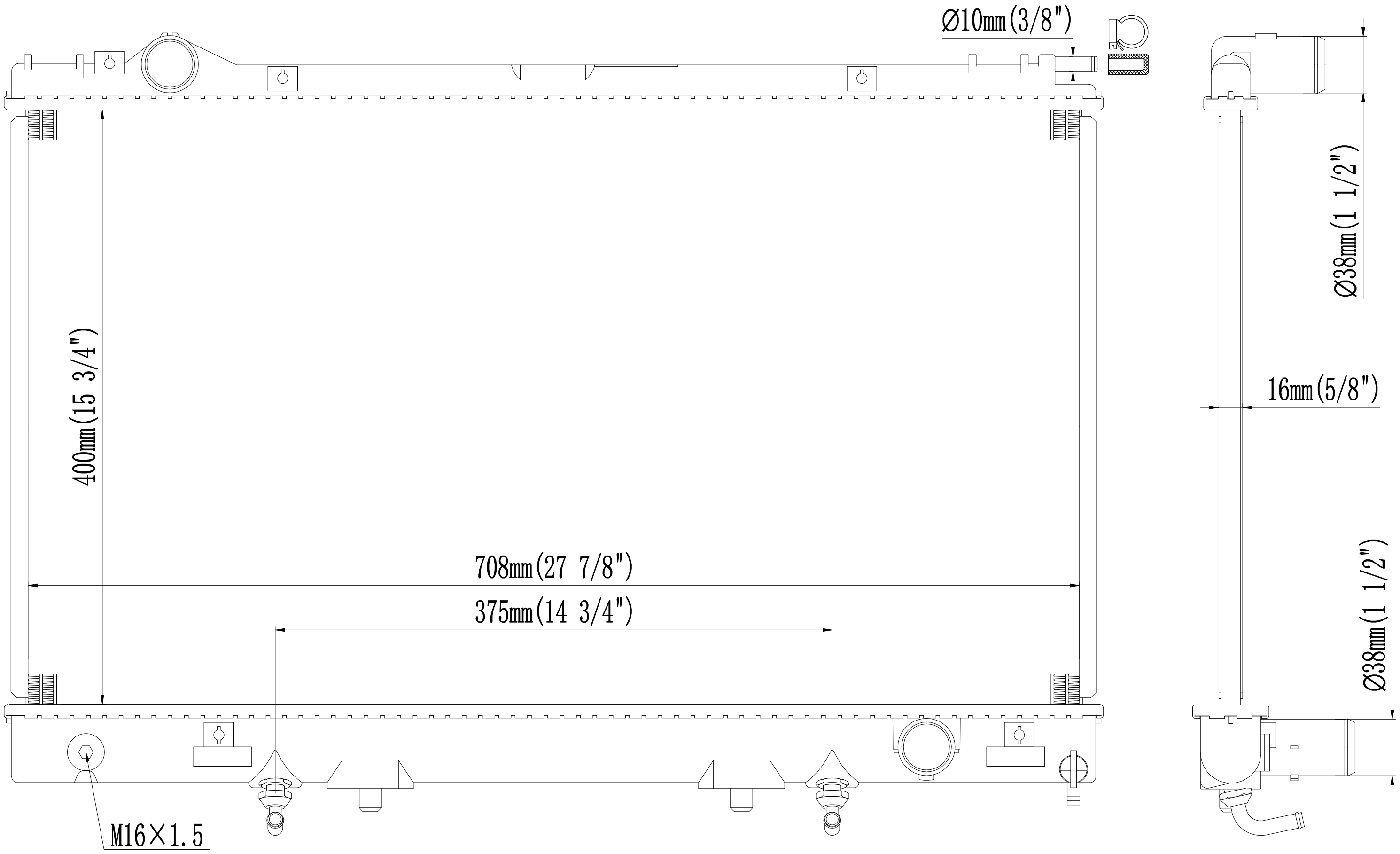
Ø10mm(3/8")
400mm(15 3/4")
708mm(27 7/8")
375mm(14 3/4")
M16×1.5
Ø38mm(1 1/2")
16mm(5/8")
Ø38mm(1 1/2")

1.41.2058.116