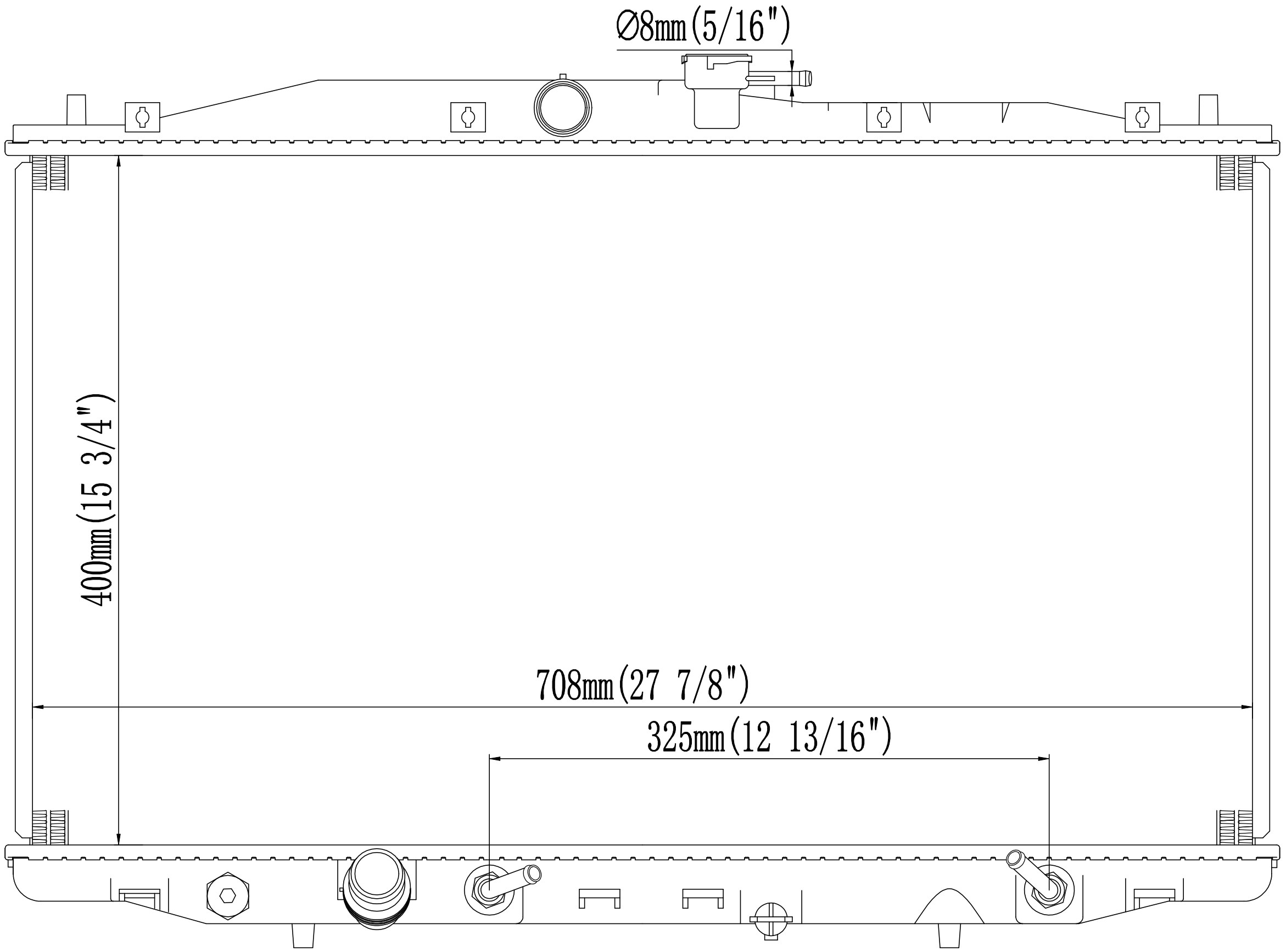
Ø8mm(5/16")
400mm(15 3/4")
708mm(27 7/8")
325mm(12 13/16")

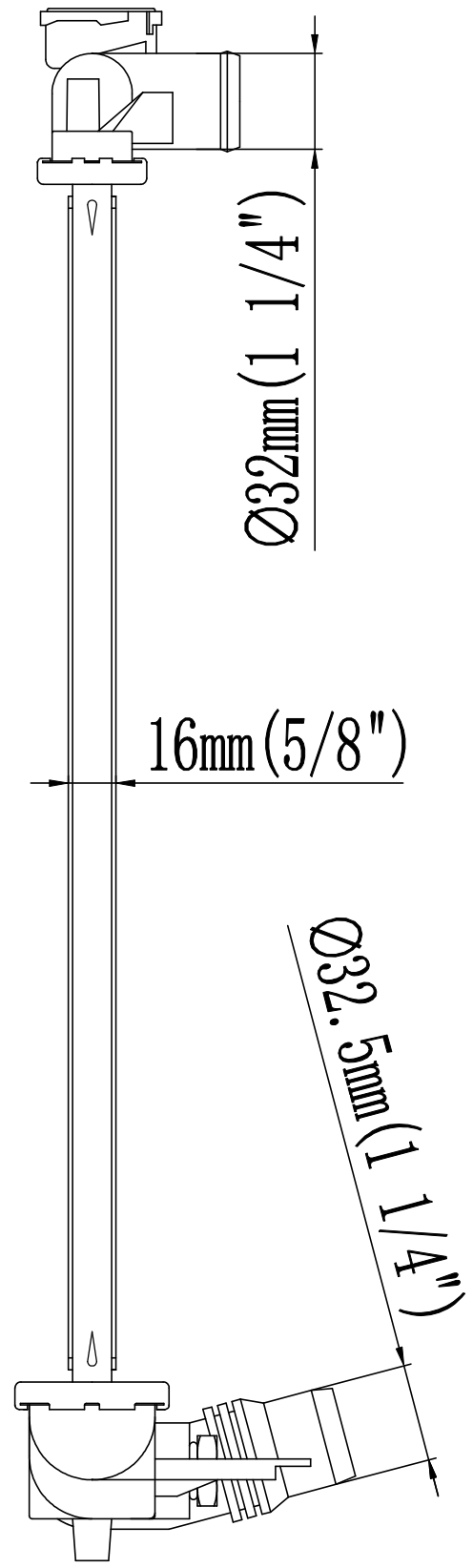
Ø32mm(1 1/4")
16mm(5/8")
Ø32.5mm(1 1/4")

1.41.2680.116