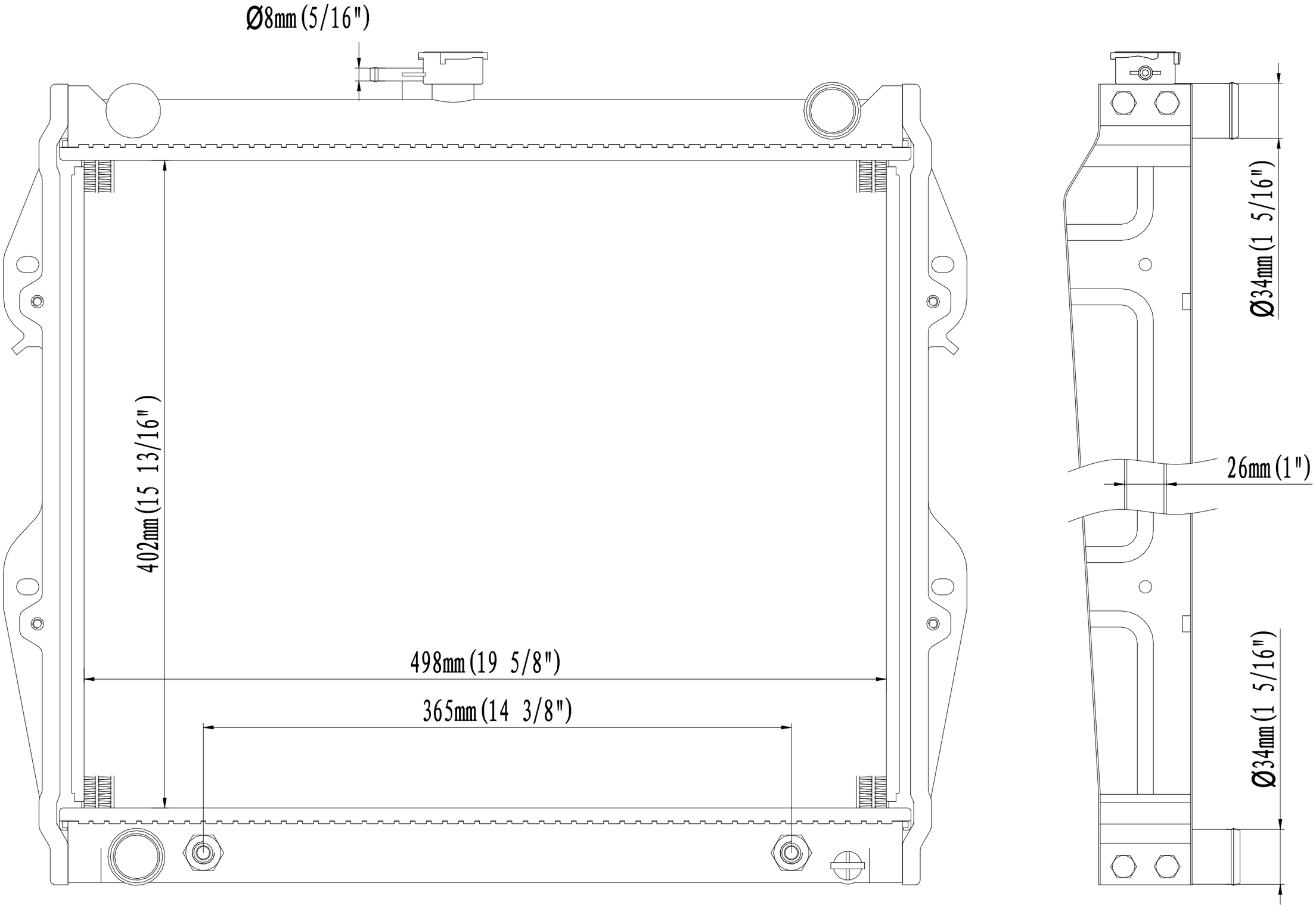
Ø8mm (5/16")
402mm (15 13/16")
498mm (19 5/8")
365mm (14 3/8")
Ø34mm (1 5/16")
26mm (1")
Ø34mm (1 5/16")

1.41.945.126