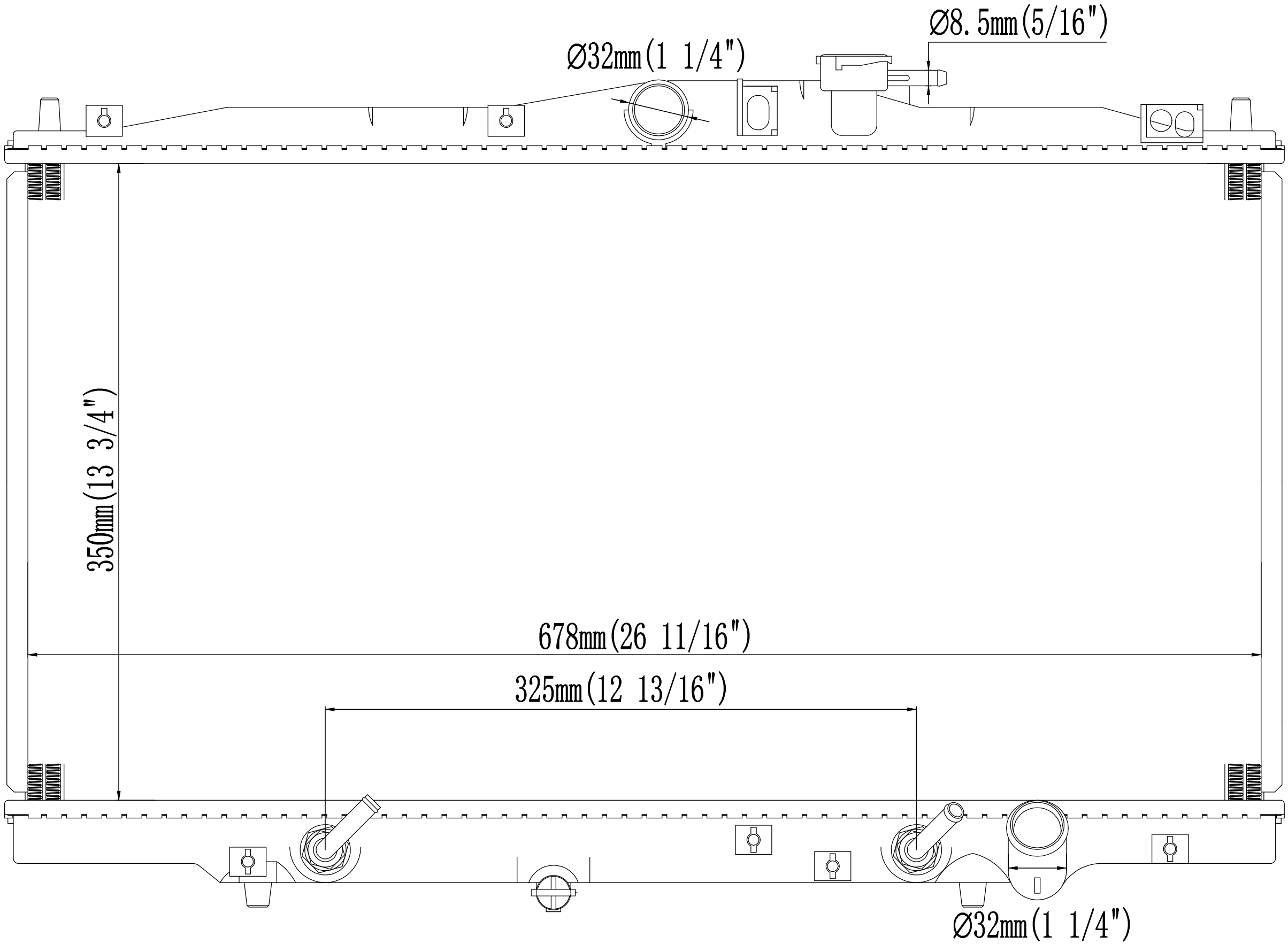
Ø8.5mm(5/16")
Ø32mm(1 1/4")
350mm(13 3/4")
678mm(26 11/16")
325mm(12 13/16")
Ø32mm(1 1/4")

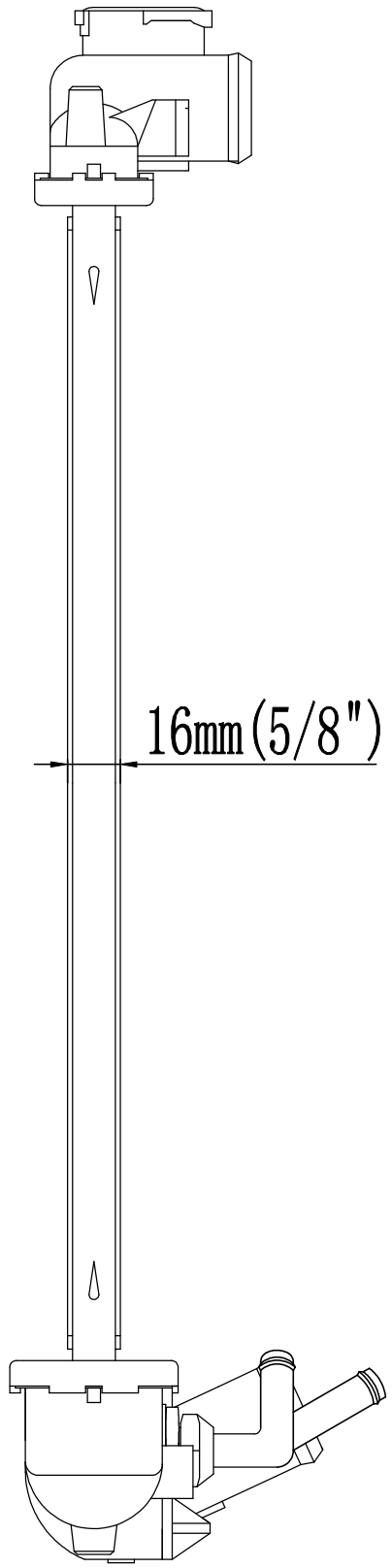
16mm(5/8")

1.41.1494.116