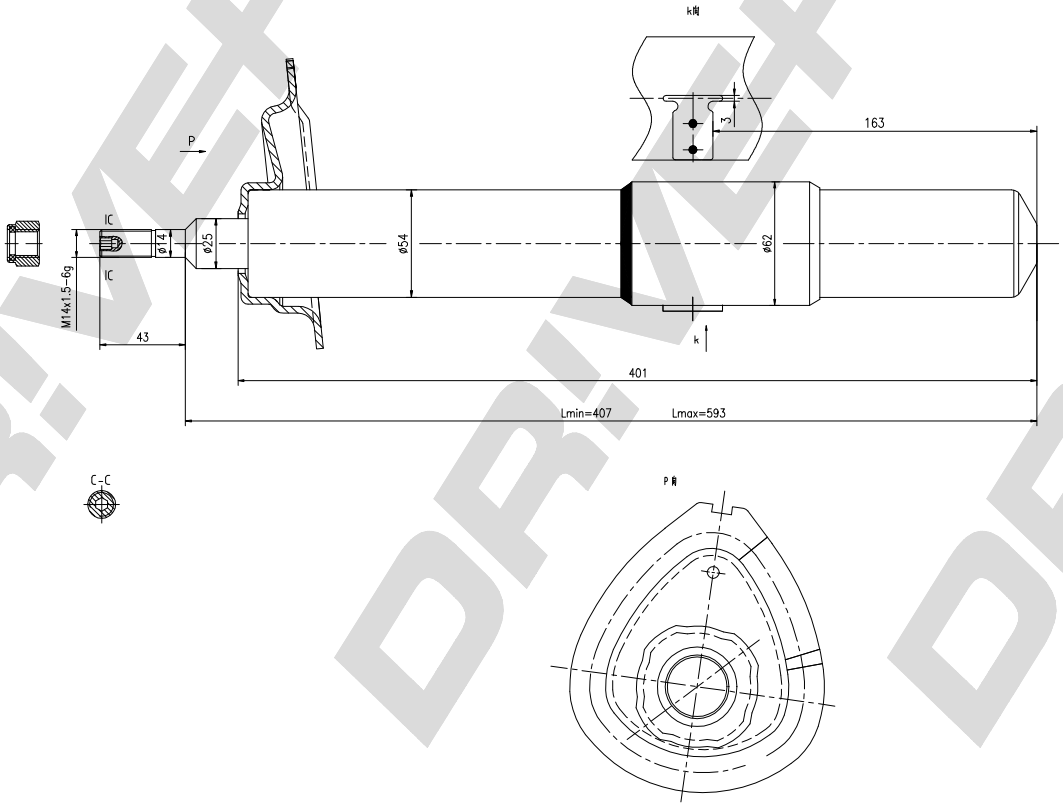

DRIVE+ Part Number	Drawing Version Number	Drawing Issue Date	
DP1610.10.0622	1.0	2024.7.18	DRIVE+ OE MATCHING QUALITY AT ITS BEST