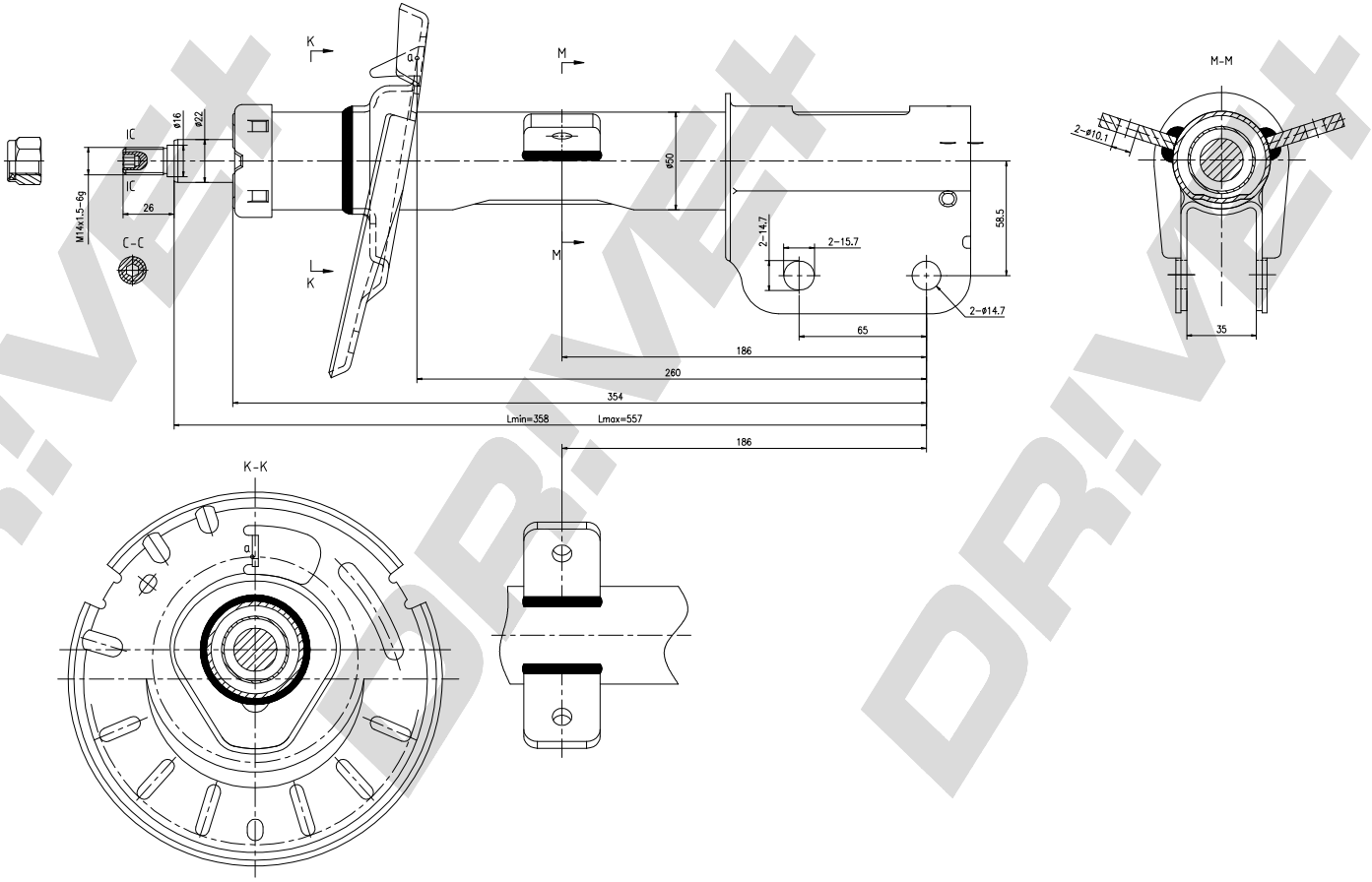

DRIVE+ Part Number	Drawing Version Number	Drawing Issue Date
DP1610.10.0655	1.0	2024.7.18

DRIVE+
OE MATCHING QUALITY AT ITS BEST