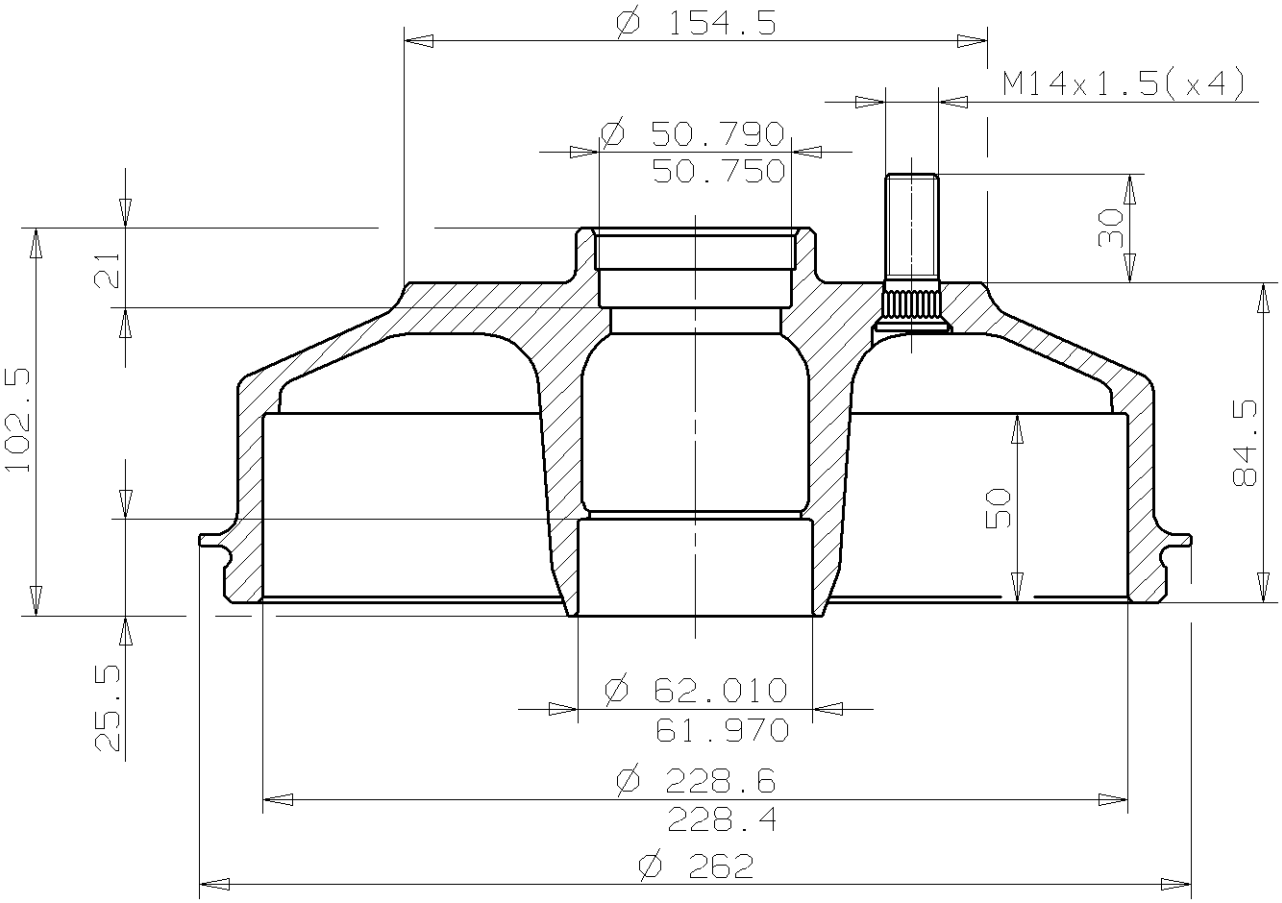

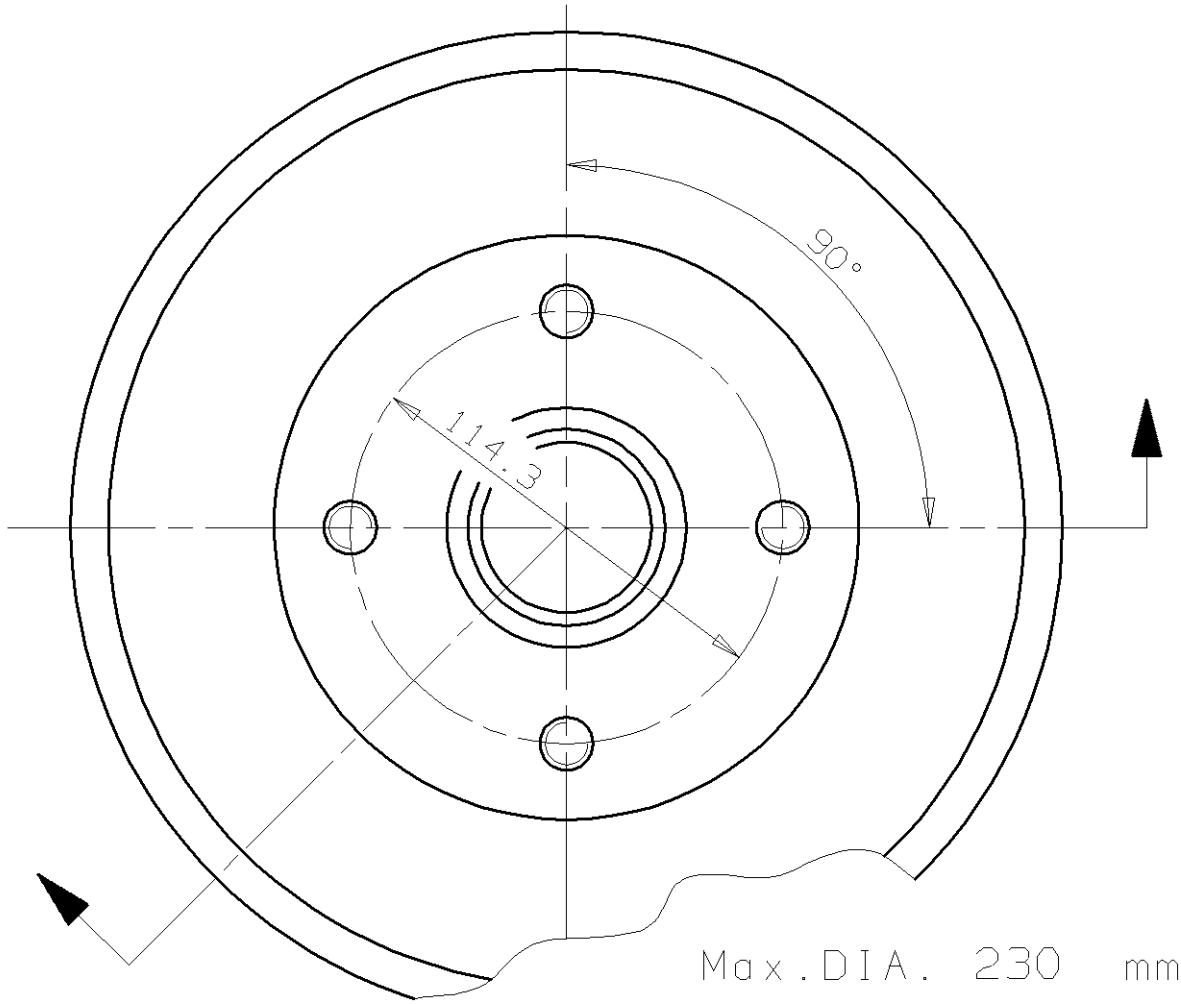

Max.DIA. 230 mm

Weight 7 Kg