4PK1102SF (Fiat/Iveco/PSA)

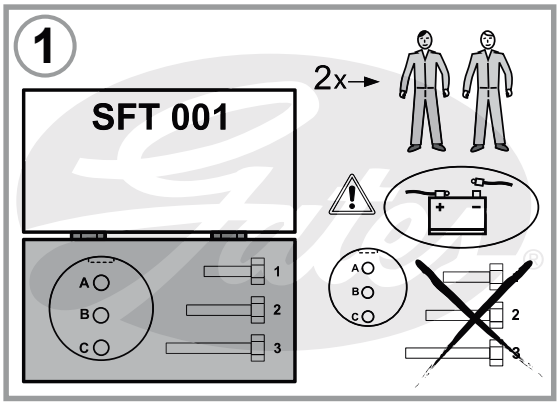

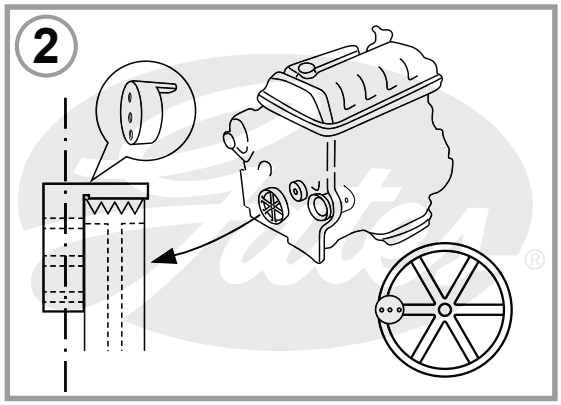

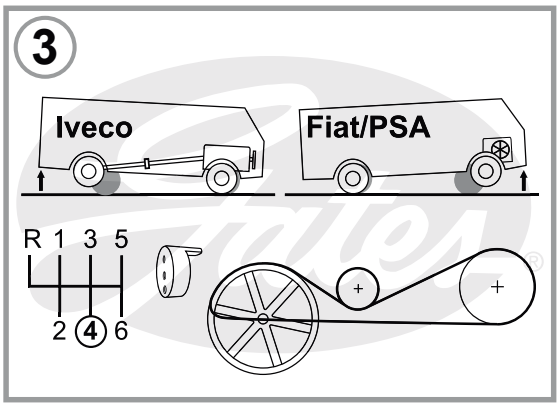

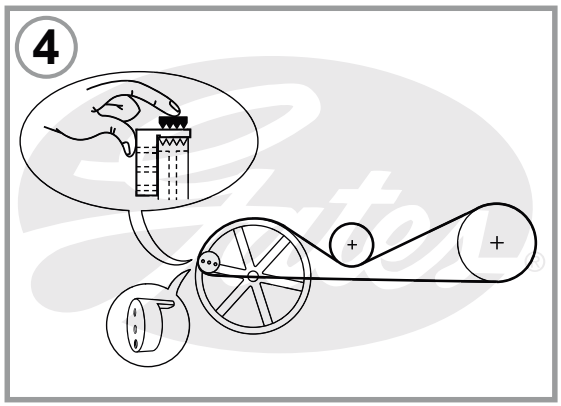

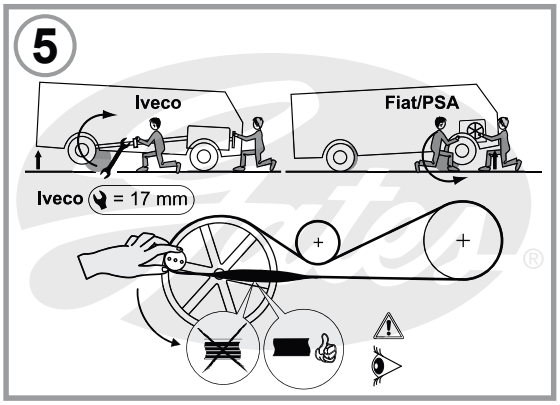

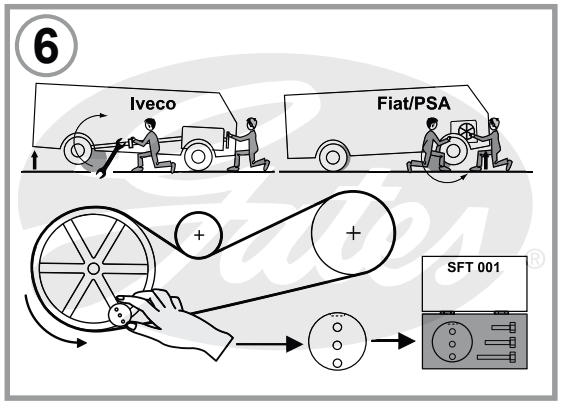

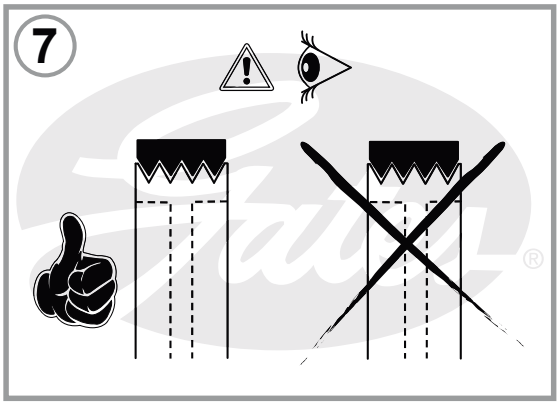

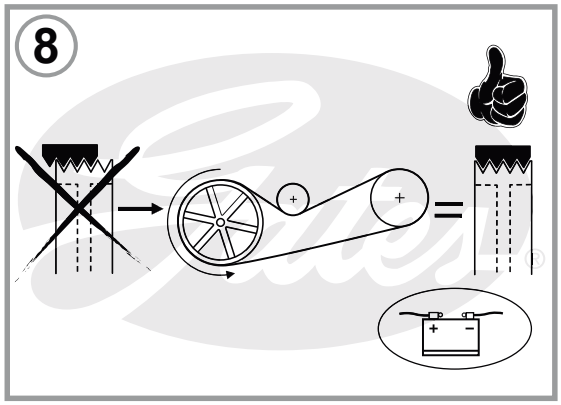

The manufacturers reserve the right to amend details where necessary. © Gates Corporation 2010 Printed in Spain - 05/10.