MOOG

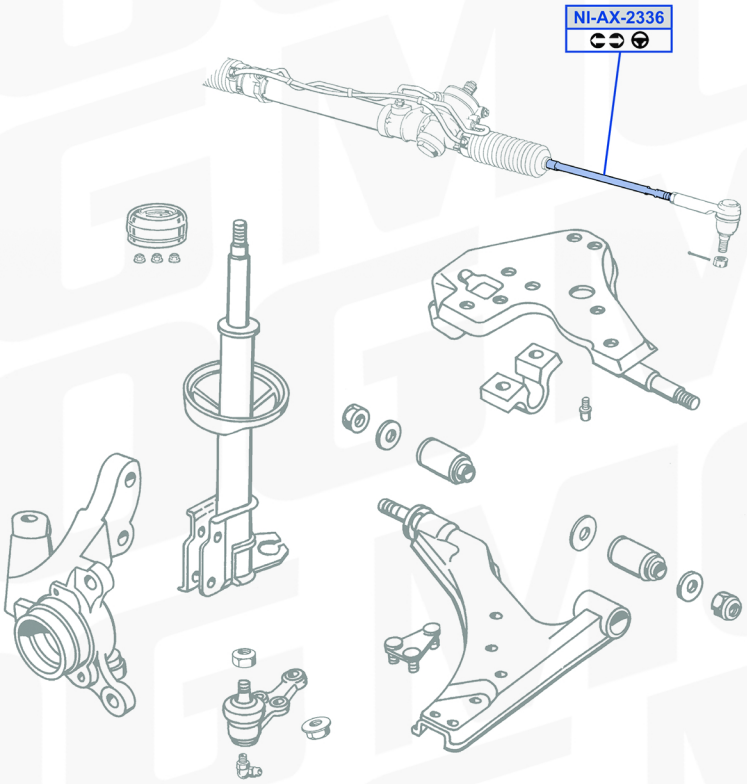

NISSAN-SUNNY-1

09/06/2023

www.moogparts.com