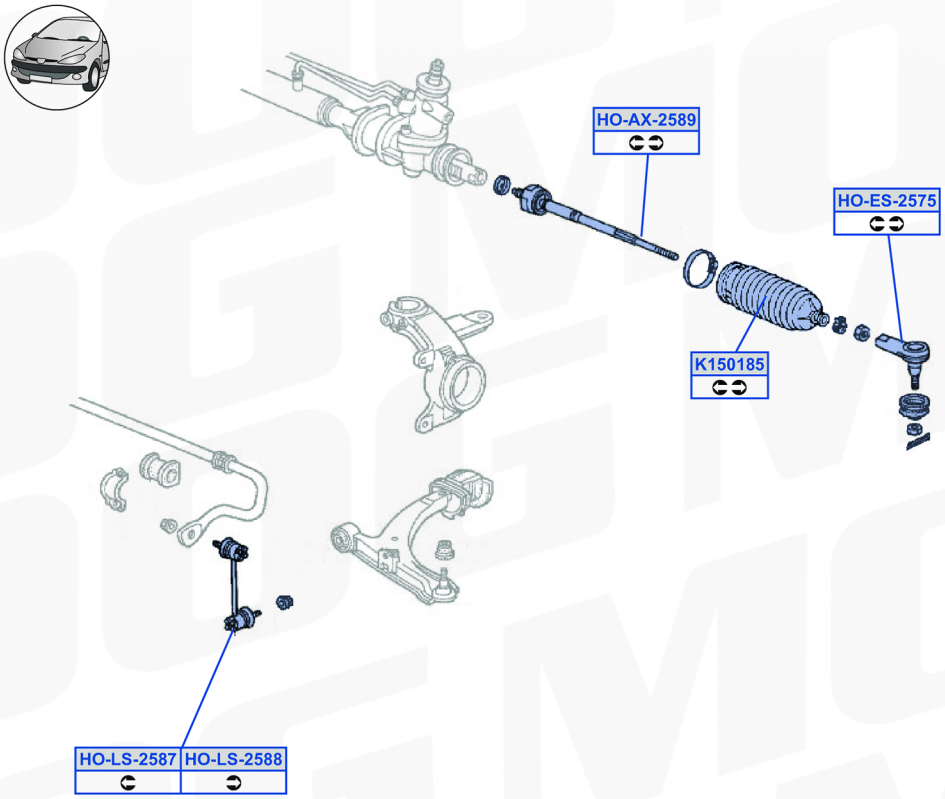
HO-AX-2589
HO-ES-2575
K150185
HO-LS-2587
HO-LS-2588

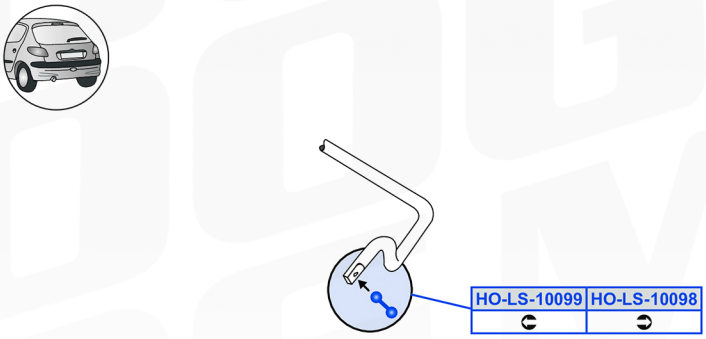
HO-LS-10099
HO-LS-10098

HONDA-HRV