MOOG

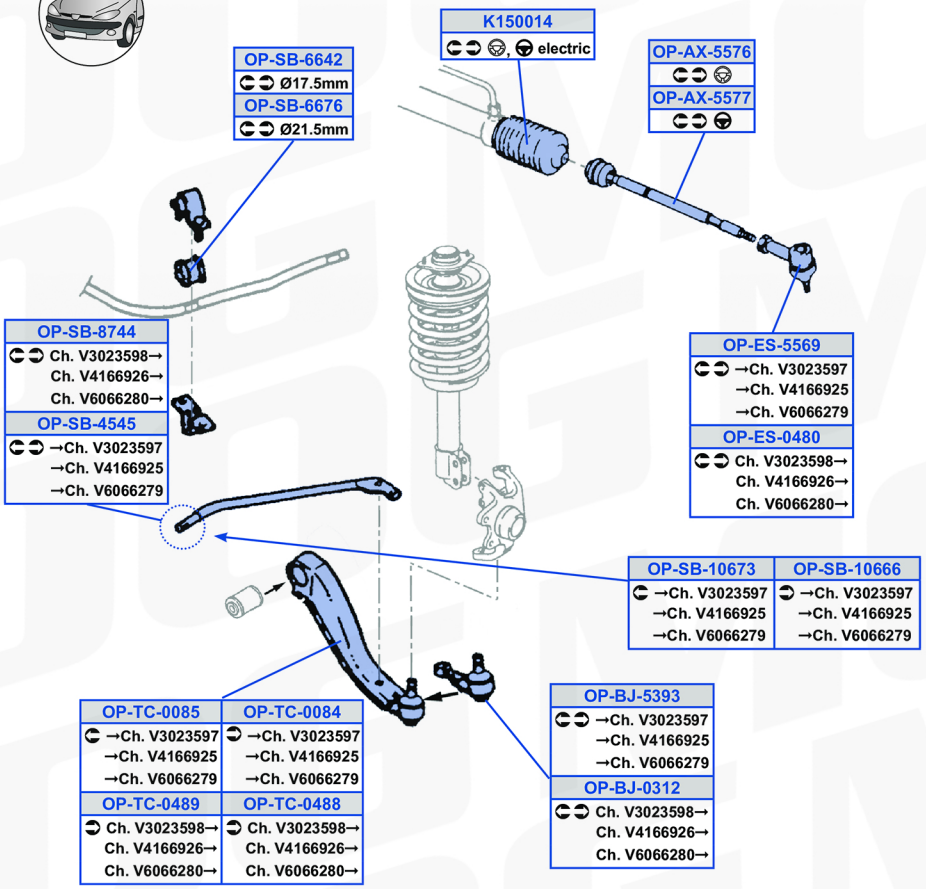

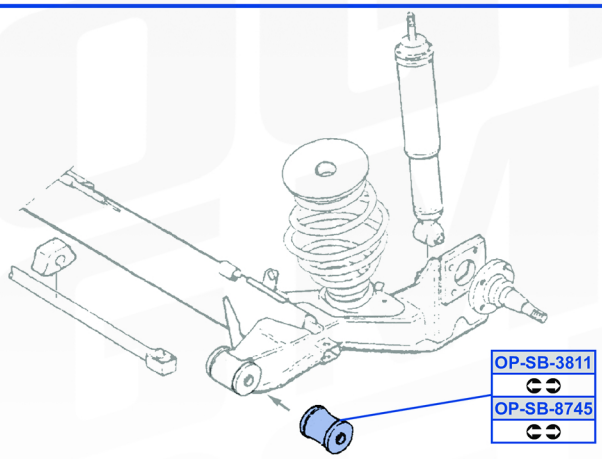

OPEL-CORSA-B

09/06/2023

www.moogparts.com