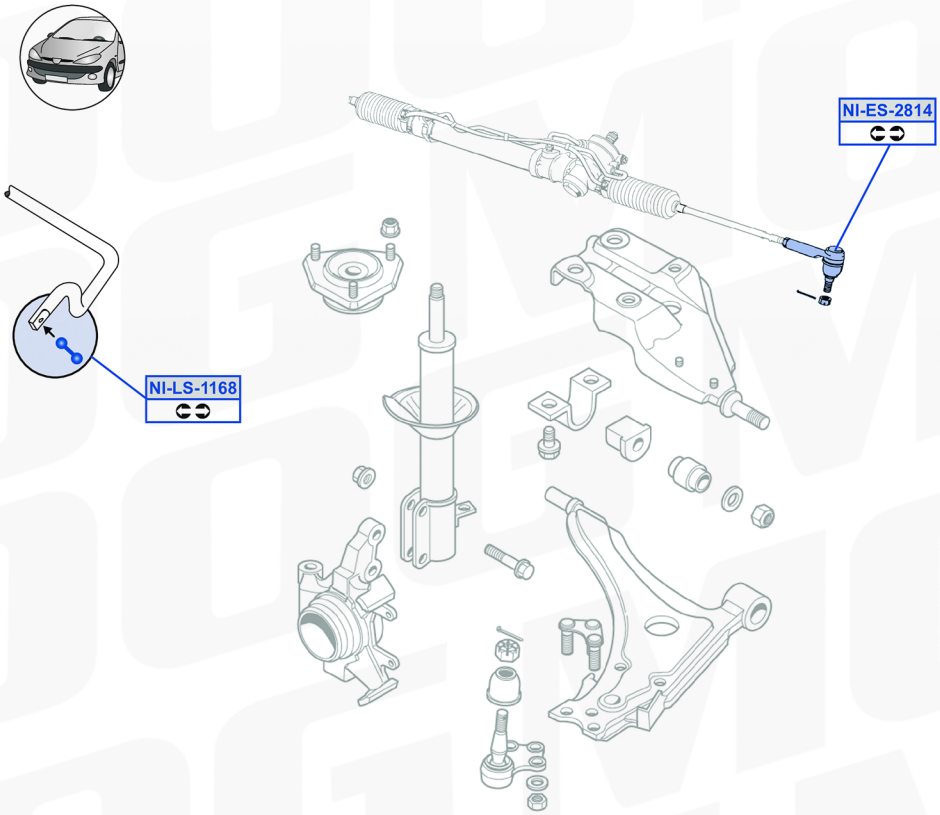

NISSAN-BLUEBIRD-U11

09/06/2023