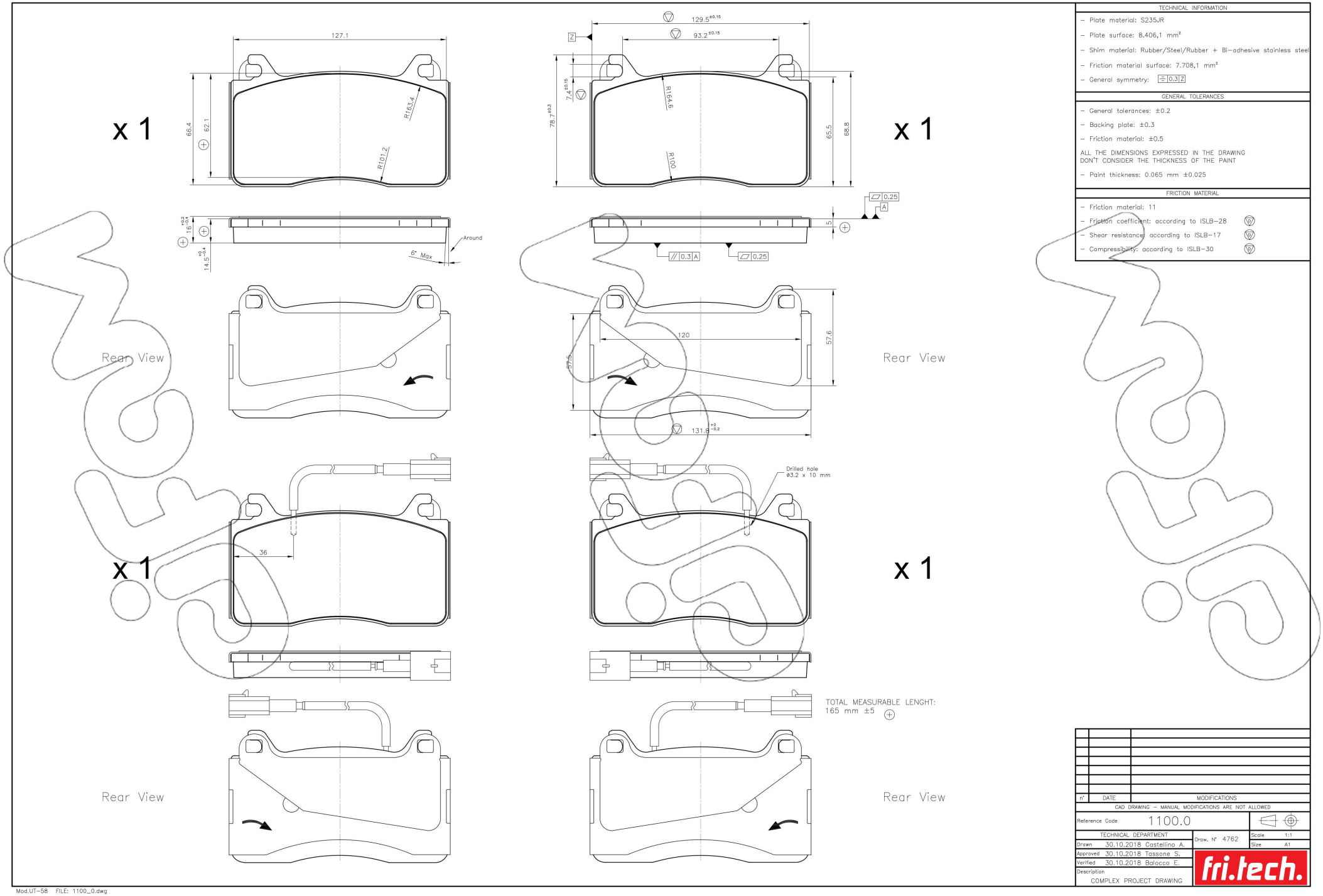

TECHNICAL INFORMATION

- Plate material: S235JR
- Plate surface: 8.406,1 mm²
- Shim material: Rubber/Steel/Rubber + Bi-adhesive stainless steel
- Friction material surface: 7.708,1 mm²
- General symmetry: ⌯ 0.3 Z

GENERAL TOLERANCES

- General tolerances: ±0.2
- Backing plate: ±0.3
- Friction material: ±0.5

ALL THE DIMENSIONS EXPRESSED IN THE DRAWING DON'T CONSIDER THE THICKNESS OF THE PAINT

- Paint thickness: 0.065 mm ±0.025

FRICTION MATERIAL

- Friction material: 11
- Friction coefficient: according to ISLB-28
- Shear resistance according to ISLB-17
- Compressibility: according to ISLB-30

n°	DATE	MODIFICATIONS

CAD DRAWING – MANUAL MODIFICATIONS ARE NOT ALLOWED

Reference Code 1100.0

TECHNICAL DEPARTMENT

Drawn 30.10.2018 Castellino A.
Approved 30.10.2018 Tassone S.
Verified 30.10.2018 Balocco E.

Draw. N° 4762

Scale 1:1
Size A1

Description
COMPLEX PROJECT DRAWING

fri.tech.

Mod.UT-58 FILE: 1100_0.dwg