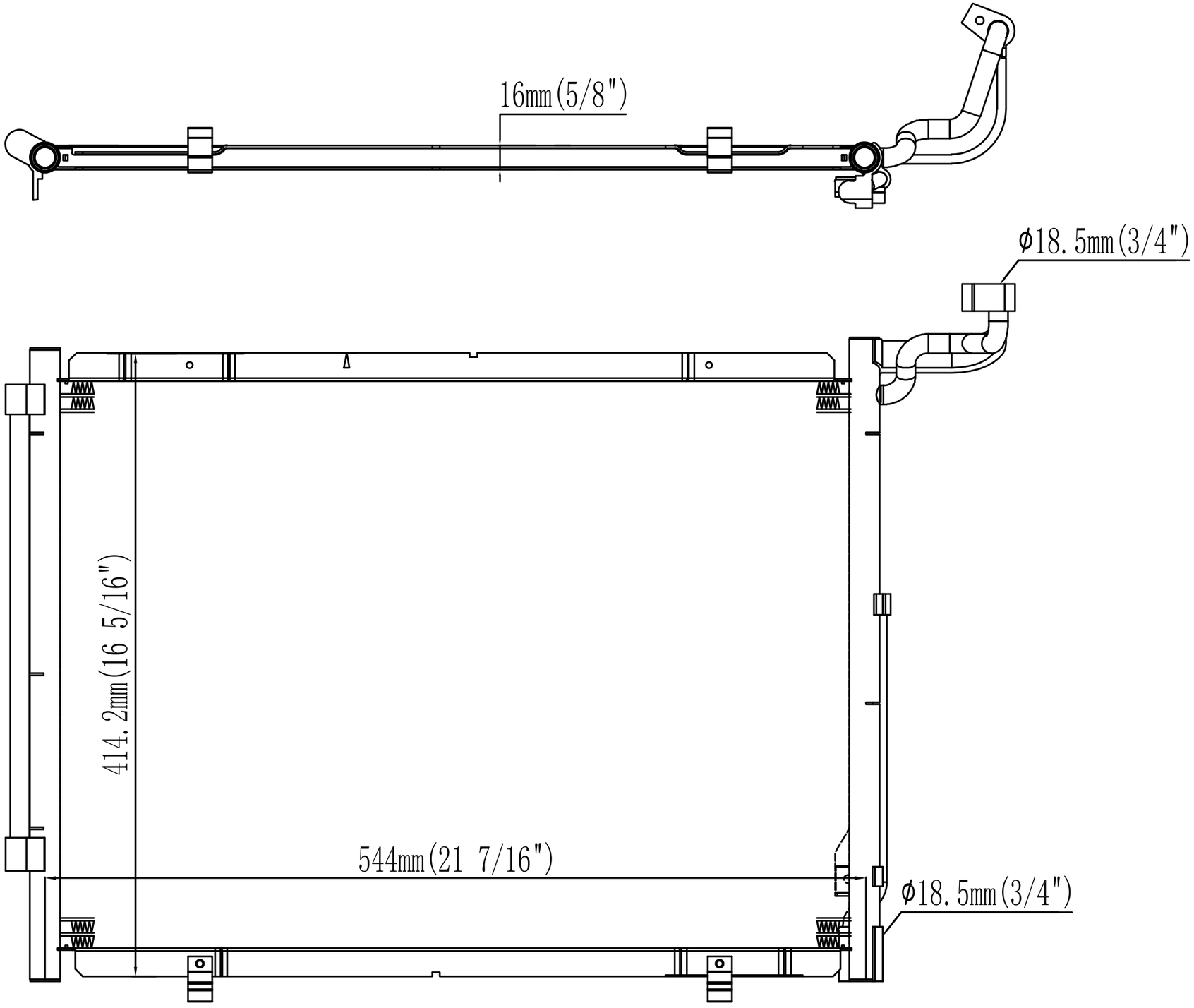

1.31.30113.PH