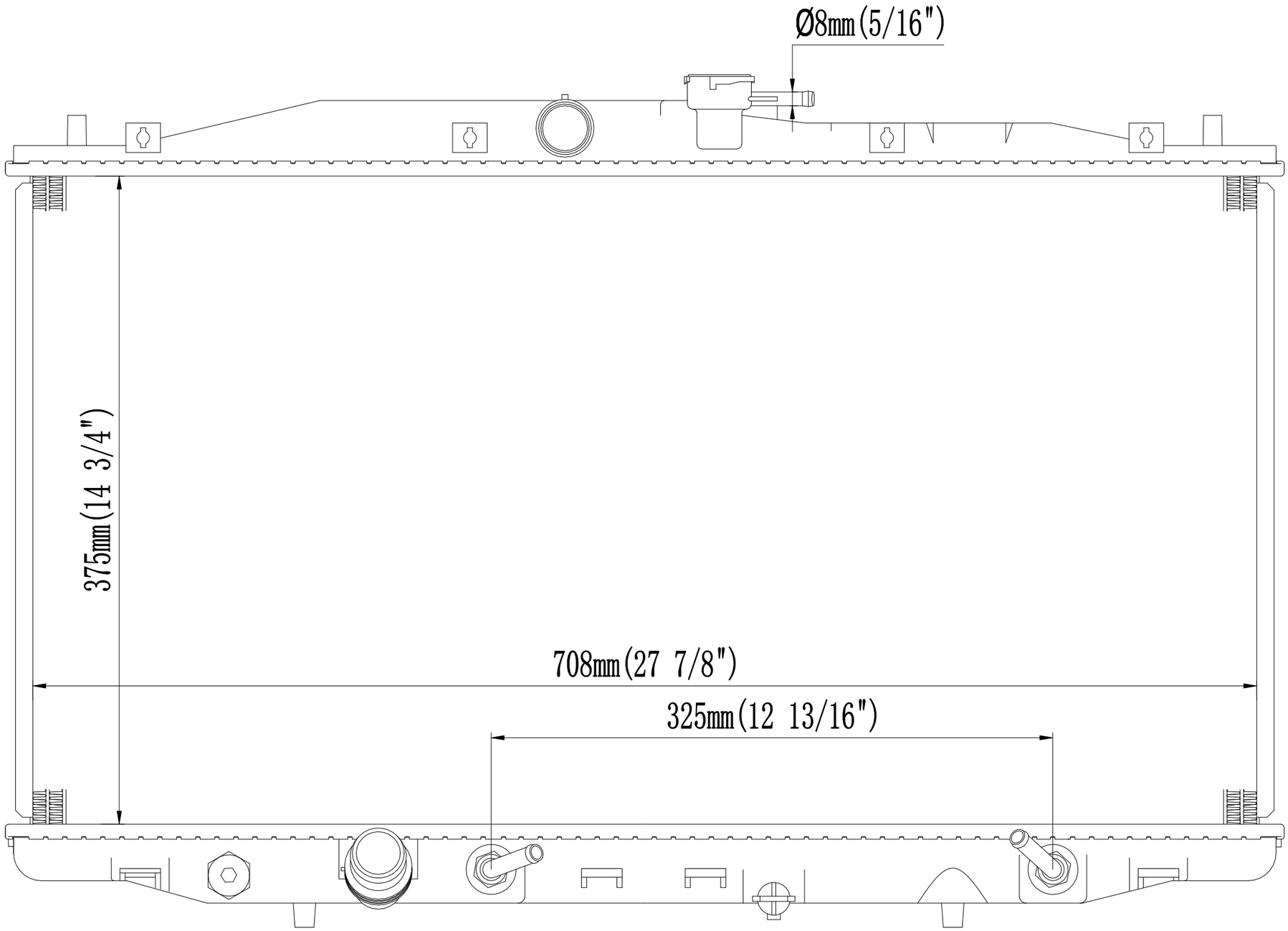

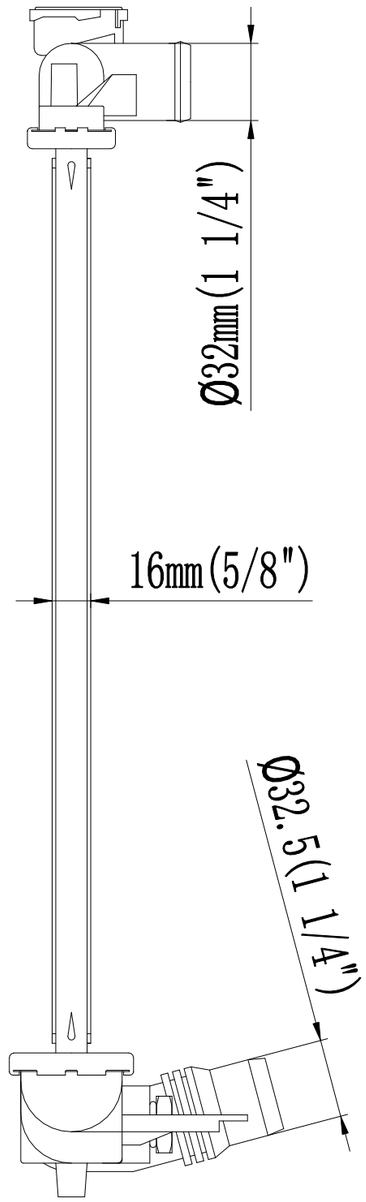

1.40.21059.116