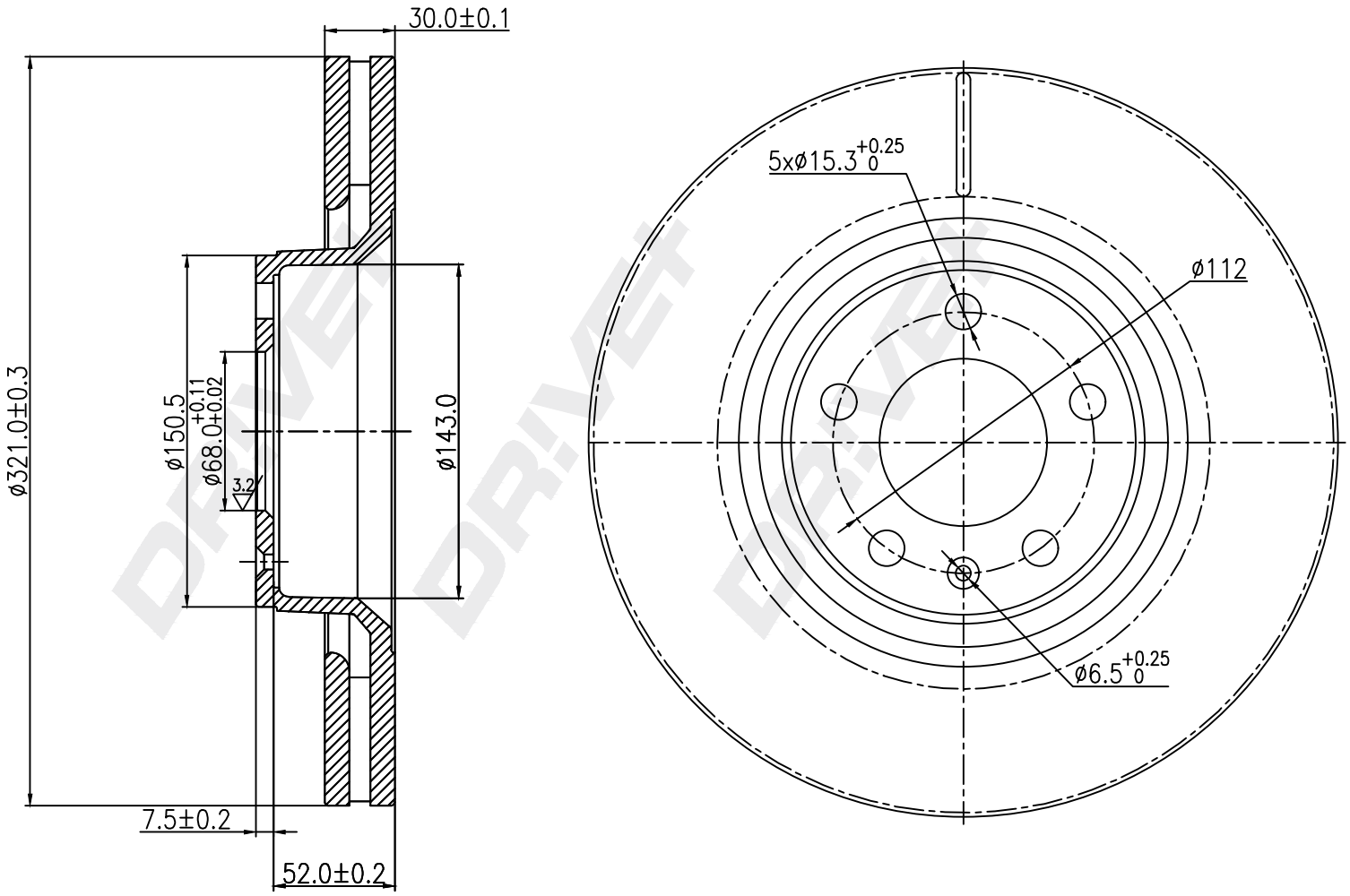

MIN THK 28 MM

DP Number	Part Number	Drawing Version Number	Drawing Issue Date
DP1010.11.0413C	DBD0413C	V1	2025.04.27