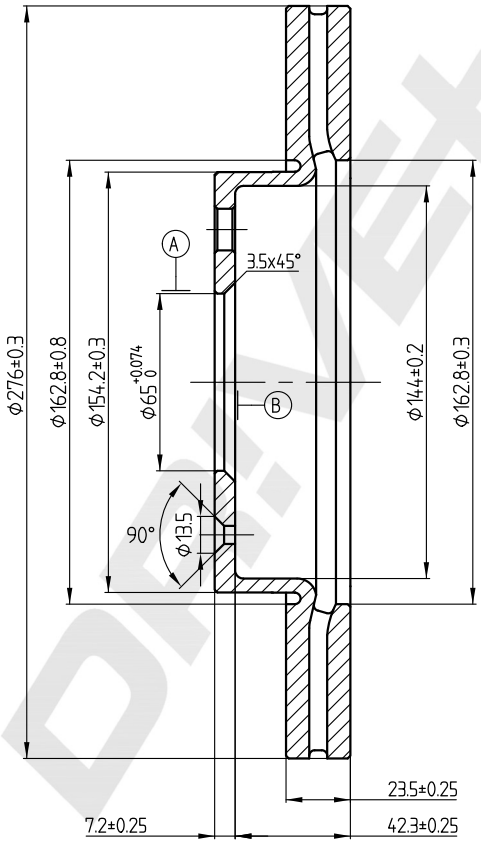

MIN THK 21 MM

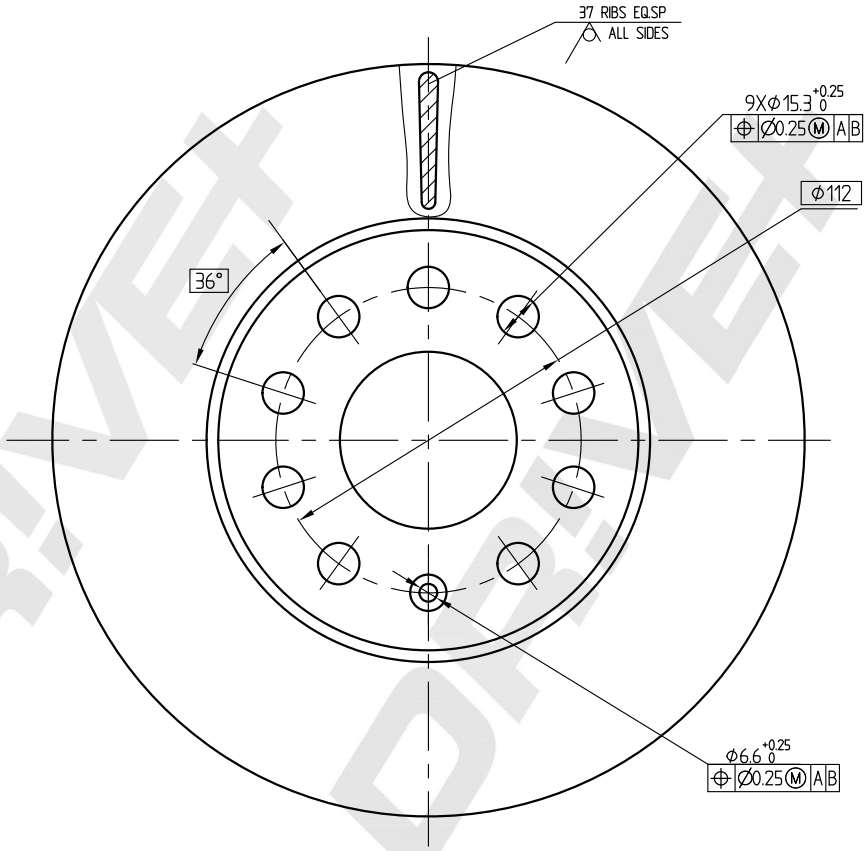

DP Number	Part Number	Drawing Version Number	Drawing Issue Date
DP1010.11.1685C	DBD1685C	V1	2025.04.19