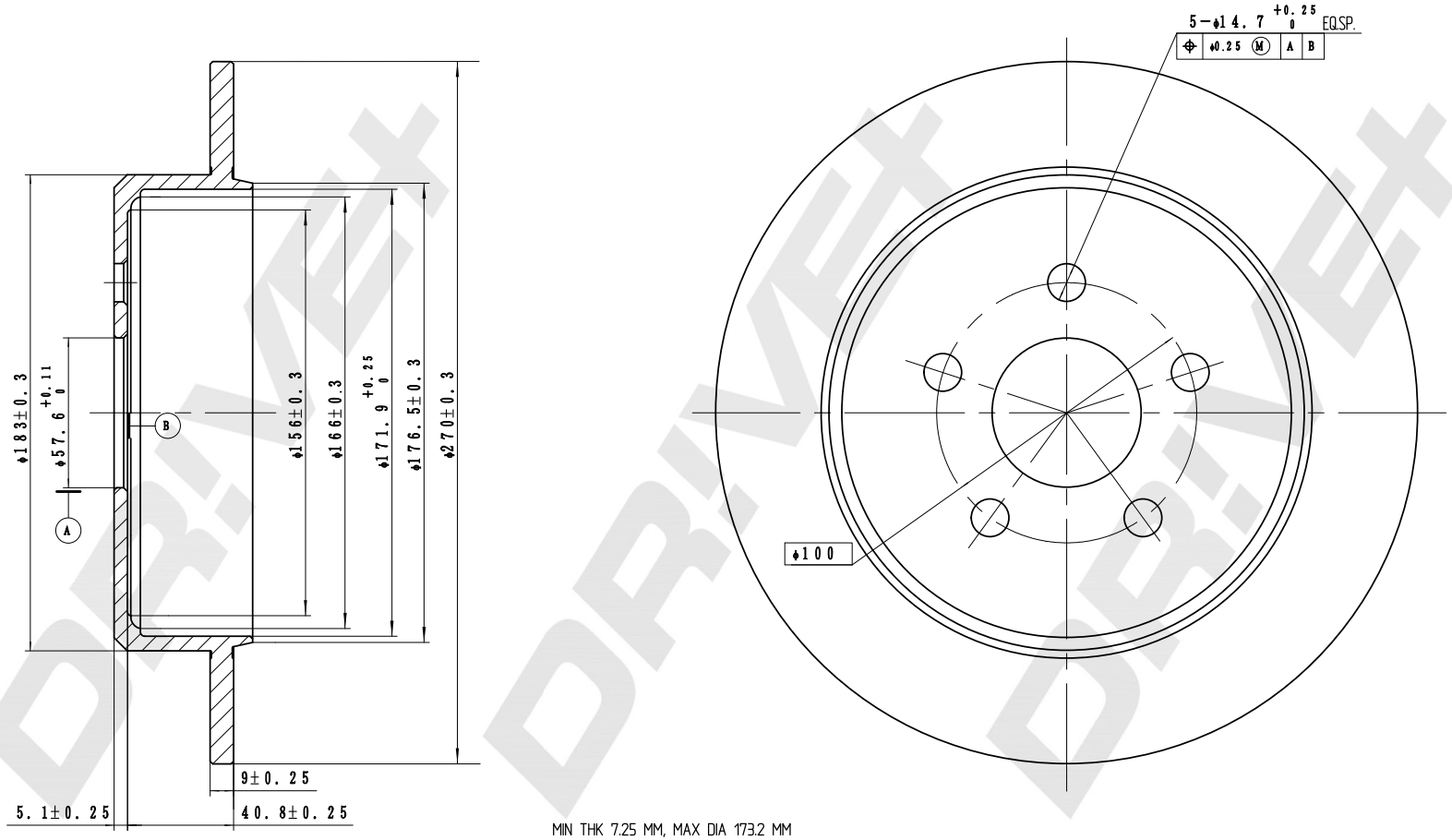

DP Number	Part Number	Drawing Version Number	Drawing Issue Date
DP1010.11.1308	DBD1308	V1	2025.04.19