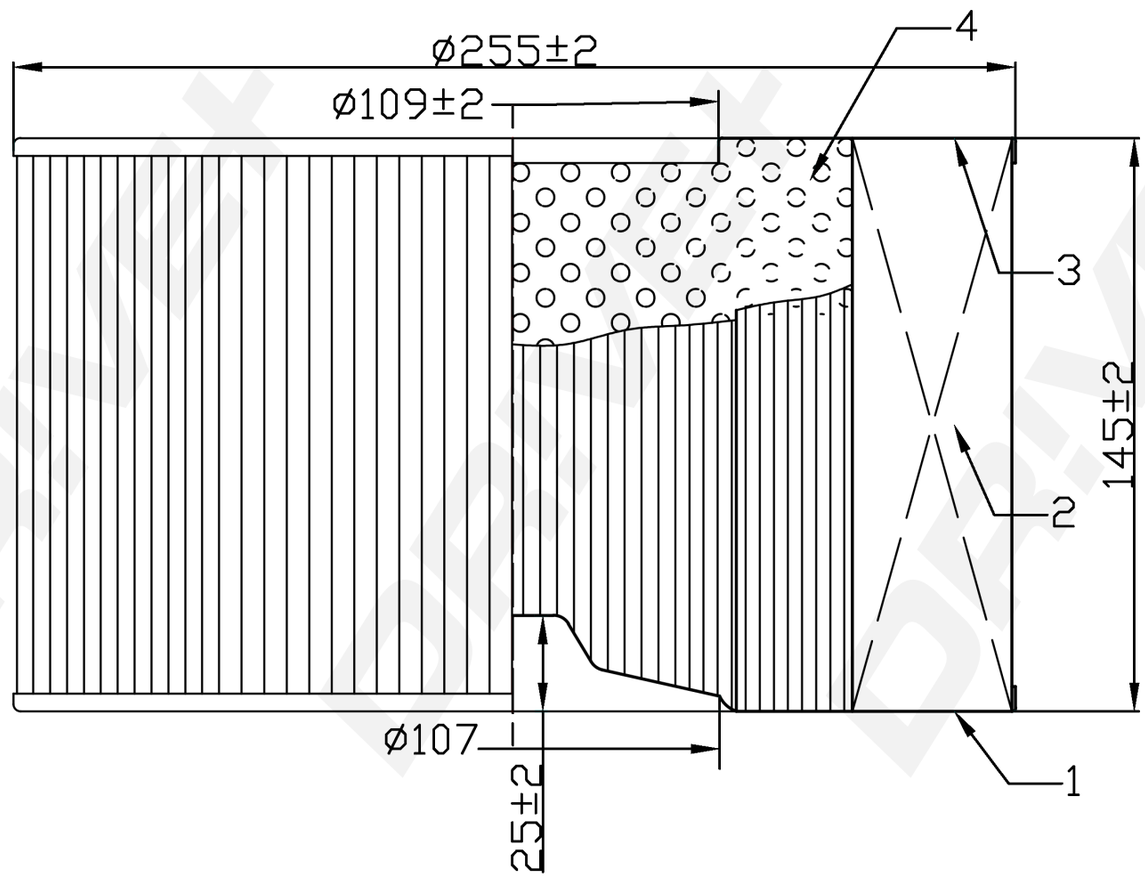

DP Number	Part Number	Drawing Version Number	Drawing Issue Date
DP1110.10.0828	DFA0828	V1	2025.04.02