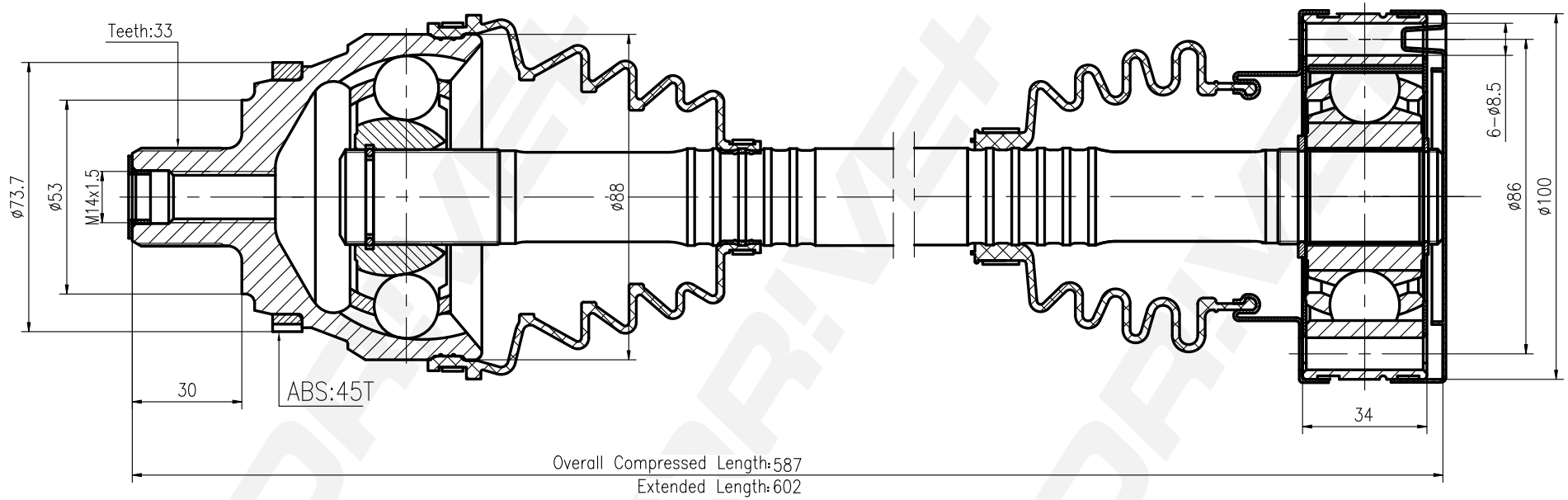

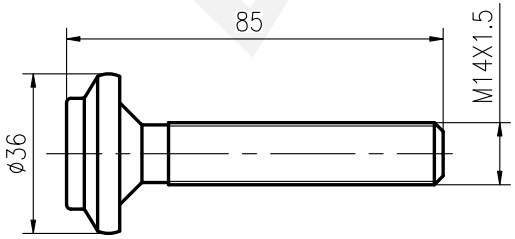

DP Number	Part Number	Drawing Version Number	Drawing Issue Date
DP2110.10.0021	DDS0021	V1	2025.04.01