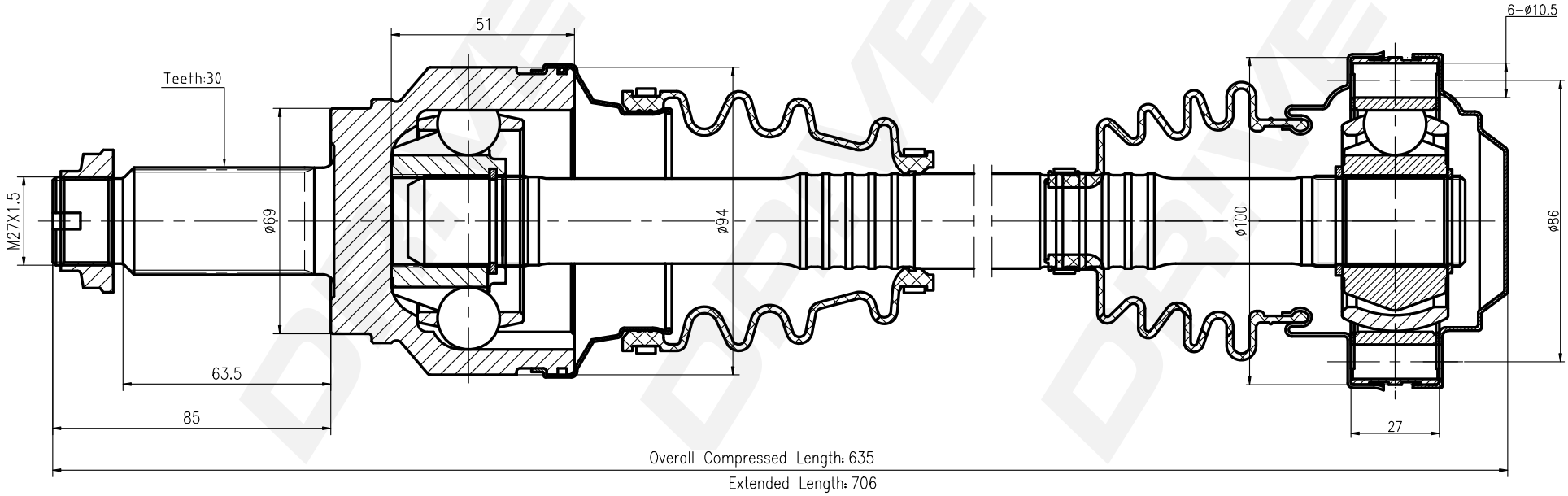

DP Number	Part Number	Drawing Version Number	Drawing Issue Date
DP2110.10.0141	DDS0141	V1	2025.4.1