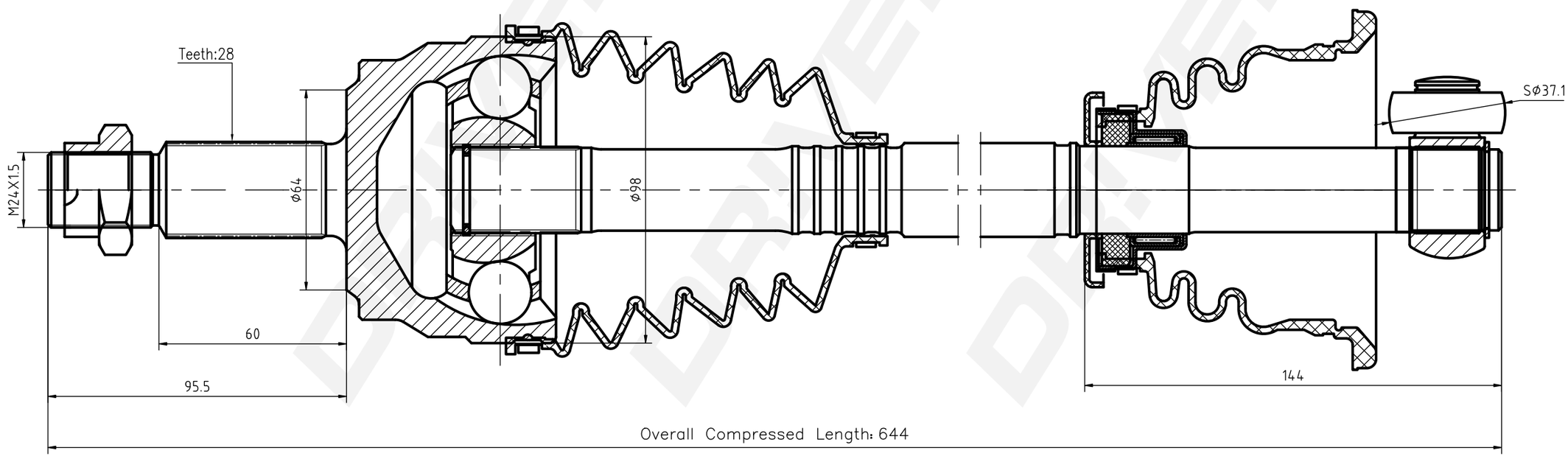

DP Number 41	Part Number	Drawing Version Number	Drawing Issue Date
DP2110.10.0456	DDS0456	V1	2025.4.1