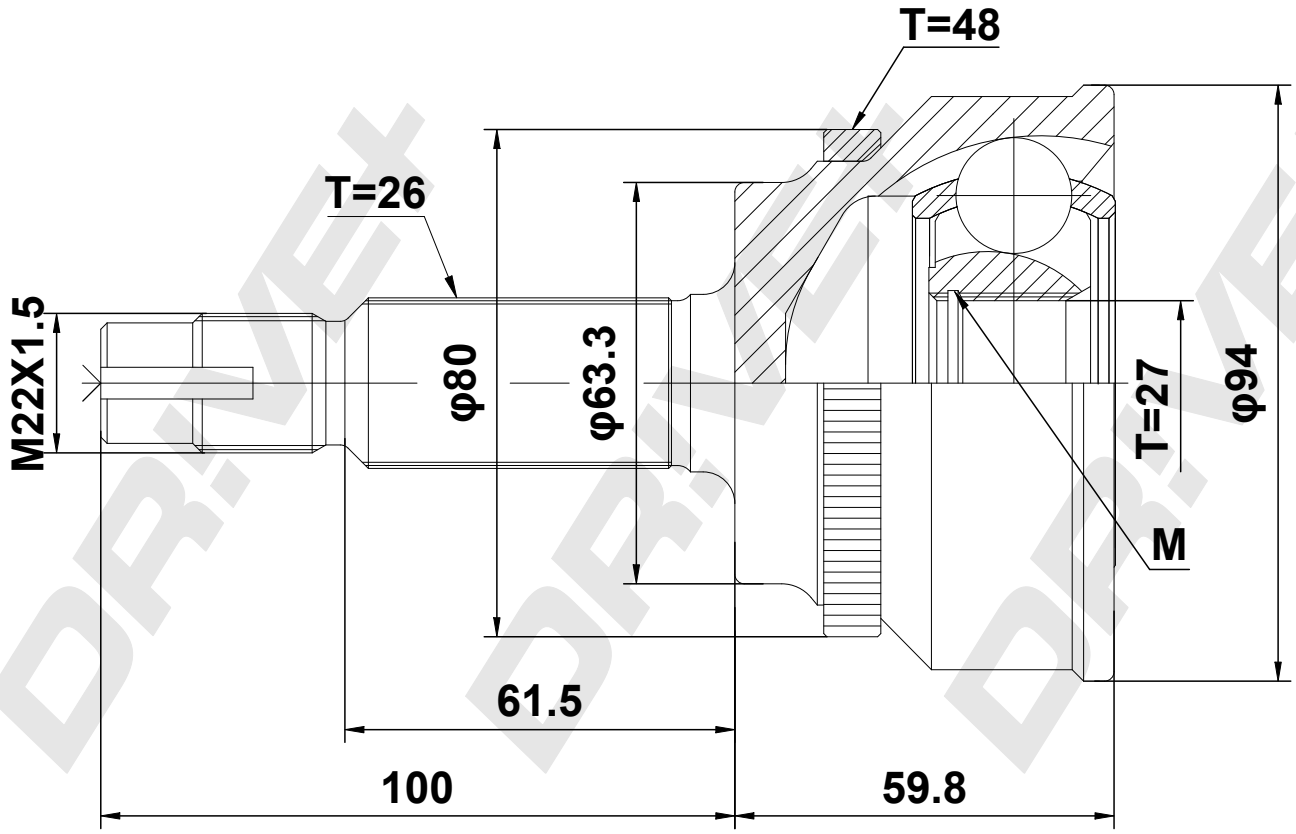

DP Number	Part Number	Drawing Version Number	Drawing Issue Date
DP2110.10.1487	DDC1487	V1	2025.11.10

DRIVE+