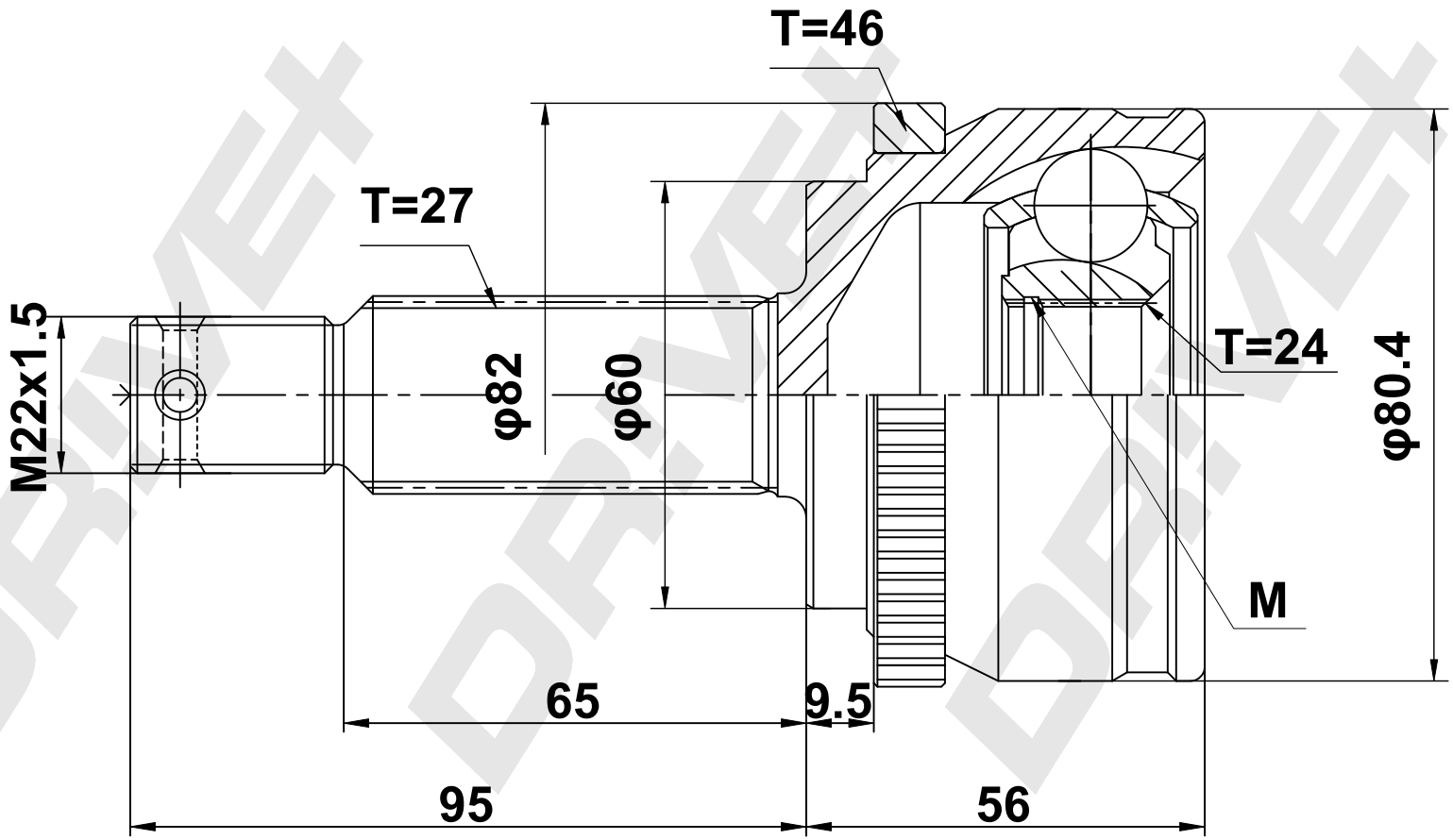

DP Number	Part Number	Drawing Version Number	Drawing Issue Date
DP2110.10.3161	DDC3161	V1	2025.04.11

DRIVE+